KRALOY®
The Fitting Choice

PRODUCT CATALOG

ELECTRICAL SYSTEMS

ISSUE DATE: JUNE 2022

www.kraloyfittings.com

The FITTING CHOICE

For more than 40 years, Kraloy has been a pioneer in the field of PVC conduit fittings. As the first UL approved manufacturer of PVC fittings, Kraloy's rich history allows us to be an industry leader today. At Kraloy we are committed to providing the highest quality products, technical support, and outstanding service. Kraloy continually offers the most up-to-date products meeting the ever changing needs of our customers.

This catalog has been prepared to provide electrical wholesalers, contractors, engineers, specifiers and utilities with the most current technical journal on Kraloy electrical systems. Only when you specify Kraloy by name are you guaranteed "The Fitting Choice".

Contents

Kraloy Rigid PVC Fittings 07

Kraloy JBox 41

Vertical-Lok Spacers 47

EPR Repair Kits 51

Kwikon ENT & Fittings 55

SceptaCon PVC for HDD 65

Sceptalight Nonmetallic Light Fixtures 71

Kwikflex NMLT Tubing & Fittings 81

INEXO ICF Boxes 85

ELECTRICAL EASY SPEC

PRODUCT	SIZE RANGE	STANDARDS	APPLICATIONS
RIGID PVC FITTINGS			
Kraloy® Rigid PVC Fittings	1/2" - 8"	CSA C22.2 No. 85, UL Listed, UL514B - UL514C, NEMA TC3	Utilities, cable, communications, residential, airports, subways, bridges & tunnels, mines, marinas, water/ sewage treatment plants, pulp & paper industries, street & highway lighting, food processing plants, agricultural, parking garages, car washes, fish plants,steel mills
JUNCTION BOXES			
Kraloy®JBox™	4" - 16"	CSA C22.2 No. 40, No. 85, NEMA 1,2,3R,4,4X,6*,6P*,12,13 *Applies only to 4" to 12" non-hinged covers	Corrosive environments, waste-water treatment facilities, marine & car washes, agricultural, wash-down
Kraloy®JBox™ with hinged covers	8" - 16"	CSA C22.2 No. 40, No. 85, NEMA 1,2,3R,4,4X,12,13	
INTERLOCKING SPACERS			
Vertical-Lok Spacers	2" - 8"	CSA C22.2 No. 227.1, No. 85, NEMA TC-13, UL 514B, UL 514C, UL 1653	Residential and commercial (low or high rise), institutional (prisons, schools,universities), hospitals & nursing homes, stadiums & arenas
CONDUIT REPAIR KITS			
EPR® Repair Kit	1-1/4" - 6"	Material Standard, ASTM	DB II duct repair, rigid PVC repair, concrete encased, direct burial, EB & DB Sch. 40/80 and HDPE
NONMETALLIC TUBING & FITTINGS			
Kwikon® ENT & Fittings	1/2" - 2-1/2"	CSA C22.2 No. 227.1, NEMA TC-13, UL 514B, 514C, 1653, 91NK 13191 E122659 Fire Test Report, Fire Tests – ULC – City of L.A.	Residential, commercial, institutional, hospitals & nursing homes, stadiums & arenas
PVC RACEWAY FOR HORIZONTAL DIRECTIONAL DRILLING			
Sceptacon™ PVC for HDD	2" - 6"	CSA C22.2 No. 211.0/211.2, UL 651, NEMA TC2	Environmentally sensitive areas, historical landmarks, road & highway crossings, urban areas, street lights, traffic lights
NONMETALLIC LIGHT FIXTURES			
Sceptalight™	3/4" Threaded hubs, Ceiling mount, Wall mount, Pendant mount	Wet Locations: CSA C22.2 No. 250, UL 1598 Hazardous Locations: UL 844 CLASS I, DIV 2 Groups A, B, C & D, CLASS II, DIV 2 Groups F & G	Chemical plant, food processing, highway tunnels, mine tunnels, walk-in freezers, industrial/ commercial, marine, agricultural, waste water, greenhouses
NMLT CONDUIT & FITTINGS			
Kwikflex® Conduit	3/8" - 2"	CSA C22.2 No. 227.2, UL 1660	HVAC equipment, marine equipment, motors and controls, printing equipment, refrigeration equipment, transformer connections, machine tools, pumps, outdoor lighting (-5ºF to 140ºF / -20ºC to 60ºC)
Kwikflex® Fittings	3/8" - 2"	UL 514B	
SPECIALTY PRODUCTS			
INEXO® ICF Boxes	1/2", 3/4", 1"	CSA C22.2 No. 18.2, UL514C	Insulated concrete form (ICF) buildings, schools, churches, hotels

ELECTRICAL TYPE DESIGNATION

UL UNDERWRITERS LABORATORIES INC. (UL 50 AND UL 50E)

TYPE DESIGNATION	STANDARD
1	Indoor use primarily to provide protection against contact with the enclosed equipment and against a limited amount of falling dirt.
2	Indoor use to provide a degree of protection against limited amounts of falling water and dirt.
3	Outdoor use to provide a degree of protection against windblown rain; undamaged by the formation of ice on the enclosure.
4	Either indoor or outdoor use to provide a degree of protection against falling rain, splashing water, and hose-directed water; undamaged by the formation of ice on the enclosure.
4X	Either indoor or outdoor use to provide a degree of protection against falling rain, splashing water, and hose-directed water; undamaged by the formation of ice on the enclosure; resists corrosion.
6P	Indoor or outdoor use primarily to provide a degree of protection against hose-directed water, the entry of water during prolonged submersion at a limited depth, and be undamaged by the formation of ice on the enclosure.
12	Indoor use to provide a degree of protection against dust, dirt, fiber flyings, dripping water, and external condensation of noncorrosive liquids.
13	Indoor use to provide a degree of protection and spraying of water, oil, and noncorrosive liquids.

This material is reproduced with permission from Underwriters Laboratories Inc. Standard for Safety for Cabinets and Boxes, UL 50, and Industrial Control Equipment, UL 50E, by Underwriters Laboratories Inc.

Underwriters Laboratories Inc. (UL) shall not be responsible to anyone for the use of or reliance upon a UL Standard by anyone. UL shall not incur any obligation or liability for damages, including consequential damages, arising out of or in connection with the use, interpretation of, or reliance upon a UL Standard.

Make the right choice!

Why is Kraloy the premier choice of electrical contractors?

- Performance
- Committed Sales Special
- Quality Products
- Innovation

Depend on Kraloy for quality products and superior service.

EPR

- Fast and easy installation
- Restores structural integrity
- Repair made while leaving cables inside

KWIKON
ELECTRICAL NONMETALLIC FITTINGS

- Easy installation save time & money
- Complete concrete-tight system
- FT-4 rated for use in fire-rated floor or ceiling assemblies

KRALOY®
PVC CONDUIT FITTINGS

- High tensile & impact strength
- Concrete-tight
- FT-4 rated

Kraloy PVC Electrical Fittings

Technical Information	8
Elbows	16
Conduit Fittings	21
Expansion Fittings	26
Access Fittings	28
Strain Relief Connectors	32
Gang Boxes	33
Covers	35
Standard Junction Boxes	37
Floor Boxes	38
Cements & Primers	40

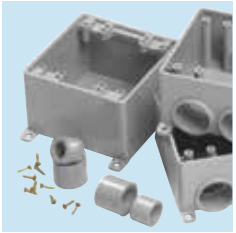
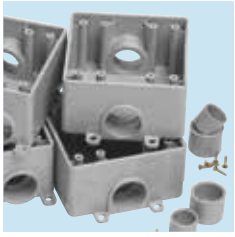

KRALOY®

For more than 40 years, Kraloy has been a pioneer in the field of PVC conduit fittings. As the first UL approved manufacturer of PVC fittings, Kraloy's rich history allows us to be an industry leader today.

Kraloy offers a comprehensive offering of PVC nonmetallic conduit fittings. Kraloy conduit fitting products include adapters, couplings, elbows, access fittings, boxes, cover plates, expansion fittings and conduit spacers - virtually any fitting required to complete the PVC conduit system.

Easy installations, the ability to perform in demanding environments and labor savings are the reasons nonmetallic conduit fittings are increasingly the fitting of choice. Kraloy PVC conduit fittings offer both high impact and tensile strength, are nonconductive and are resistant to a wide range of chemicals such as acids, alkalis and salt solutions.

APPLICATIONS

- Residential single & multi family dwellings
- Food processing plants
- Fish processing plants
- Street and highway lighting
- Sewage treatment plants
- Water treatment plants
- Bridges and tunnels
- Communications
- Pulp and paper
- Agricultural
- Car washes
- Marinas
- Airports
- Utilities
- Cable

STANDARDS

Underwriters Laboratories

UL50 Enclosures for Electrical Equipment

UL514B Fittings for Cable & Conduit

UL514C Nonmetallic Outlet Boxes, Flush-Device Boxes & Covers

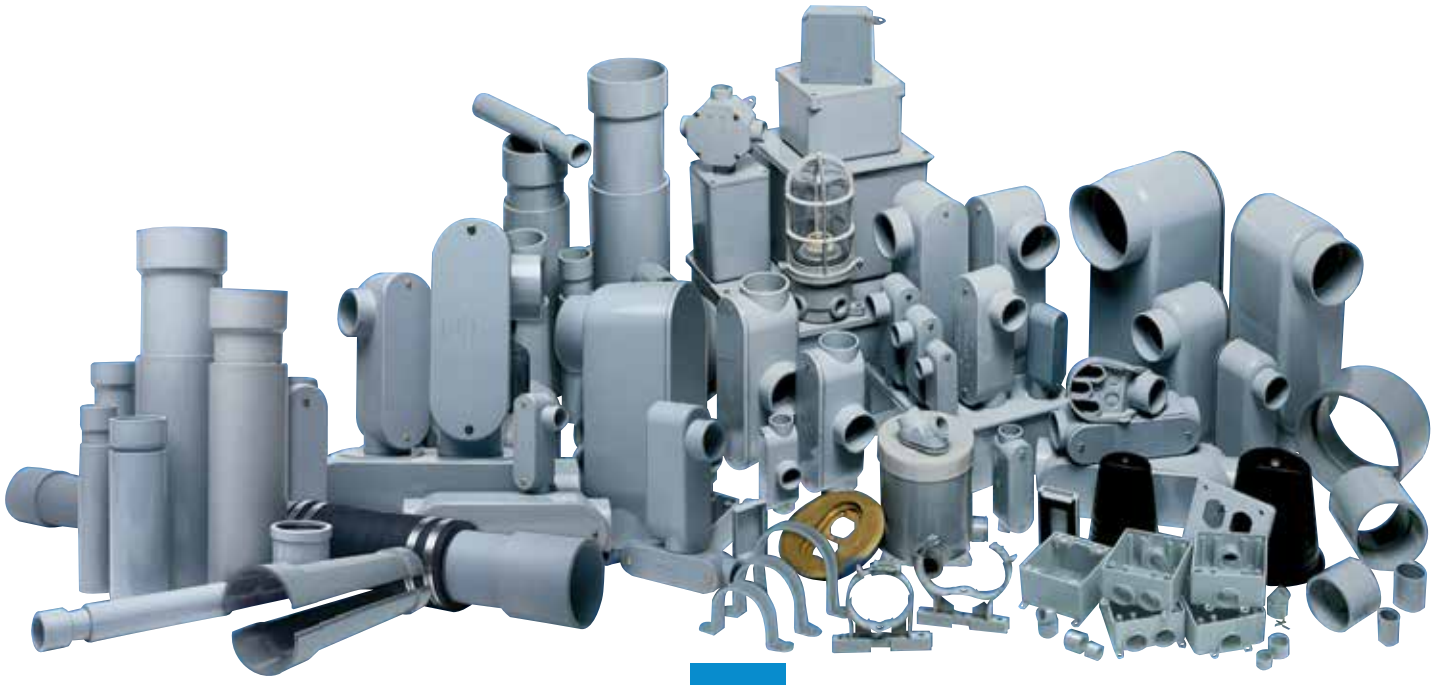

ADVANTAGES

1 LABOR SAVINGS

Compared to yesterday's metal products, PVC reduces labor on typical installations by as much as two-thirds, because it is easy to work with. PVC does not require the labor intensive tools usually associated with steel products, such as vises, threading equipment and reamers.

2 EASY JOINING

All that is required to join your Kraloy fittings with PVC conduit is Kraloy Solvent Cement (see solvent cementing instructions, page 5).

3 STRENGTH

Kraloy PVC fittings offer both high impact and high tensile strength.

4 CORROSION RESISTANT

PVC is resistant to external corrosion and pitting and will not rust. This ensures a lower maintenance cost and a longer performance life.

5 NONCONDUCTIVE

PVC eliminates the most dangerous second point of contact in phase to ground faults. The use of a separate grounding conductor gives a complete and positive ground for the entire system.

6 CHEMICAL RESISTANT

Kraloy PVC fittings are resistant to a wide range of chemicals such as acids, alkalis or salt solutions. For more information on chemical resistance, contact Kraloy customer service.

7 AGING CHARACTERISTICS

After years of exposure to direct sunlight, heat, and extreme weather, Kraloy PVC fittings retain their original properties. They are also resistant to fungi, bacterial action, rodents and termites, providing for a long and trouble free life.

8 FIRE RESISTANCE

As a building material PVC offers outstanding fire performance characteristics. PVC will not burn unless an external flame source is applied, and will not sustain ignition once the flame source is removed. PVC has a flash ignition temperature of 850°F.

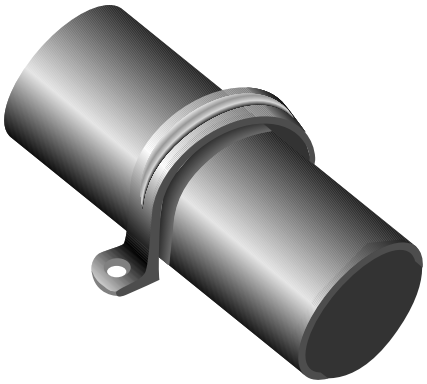

SUPPORT

Due to PVC's light weight, support spacing is different than that used with metal conduits. Supporting straps should NOT be firmly tightened, to allow for linear movement. The maximum allowable support spacing, per the National Electrical Code Article 352.30 (B) is as follows:

SUPPORT SPACING

Nominal Conduit Diameter inches	National Electrical Code Max. Support Spacing feet
1/2	2-1/2
3/4	2-1/2
1	2-1/2
1-1/4	4
1-1/2	4
2	5
2-1/2	6
3	6
3-1/2	7
4	7
5	7
6	8

MAX OPERATING TEMPERATURE

The National Electrical Code (NEC) allows the use of rigid nonmetallic conduit (RNC) and fittings in locations where ambient temperatures are not in excess of 122°F.

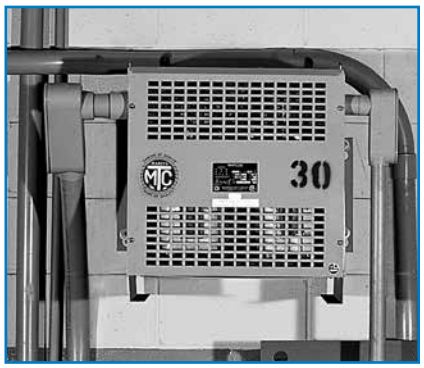

CUTTING

Kraloy Rigid PVC Conduit can be easily cut on the jobsite by using a hacksaw, carpenter's saw or PVC conduit cutters. For larger sizes of conduit, the use of a mitre box is also recommended to ensure a square cut.

SOLVENT CEMENTING

After cutting PVC rigid conduit, sharp edges or burrs from inside the conduit should be removed with a knife. Thoroughly clean the end of the pipe and inside the fitting with a pipe cleaner. In extreme weather conditions, a primer should be used to prepare the joint for solvent cementing. Apply a generous amount of solvent cement to both surfaces, slide together and give a quarter turn to ensure solvent is spread evenly on the material. Hold together for a few seconds until the joint is made.

Usually the solvent-cemented joint will be strong enough to install immediately, but in low temperatures and high humidity, extra time may be required before moving the pipe to install it permanently. Solvent cemented joints appear to "set up" instantly, but will take 24 hours to cure properly. After this time, the solvent-cemented joint has completely cured and is waterproof. Kraloy cement is available in half-pint, pint, quarts and one-gallon containers.

HANDLING

Solvent cements should be used as received in original containers. Adding thinners to change viscosity is not recommended. If cement is jelly-like and not free-flowing, it should not be used. Containers should be kept tightly covered when not in use.

STORAGE CONDITIONS

Solvent cements should be stored at temperatures between 40°F and 110°F away from heat or open flame. Cements should be used before the expiry date stamped on the container. If new cement is subjected to freezing temperatures, it may become extremely thick. This cement can be placed in a warm area where it will soon return to its original, usable condition. However, if the product is gelled or hardened due to actual solvent loss (when a container is left open too long during use or not sealed properly after use), the cement will not return to its original condition. Cement in this condition has lost its formulation and should be discarded in an environmentally friendly manner.

SAFETY PRECAUTIONS

Solvent cements are extremely flammable and should not be used or stored near heat or open flame. In confined or partially enclosed areas, a ventilating device should be used to remove vapors and minimize inhalation. Containers should be kept tightly closed when not in use, and covered as much as possible when in use. Avoid frequent contact with the skin. In case of eye contact, flush repeatedly with water. Keep out of the reach of children.

COLD WEATHER

Although normal installation temperatures are between 40°F to 110°F, high strength joints have been made at temperatures as low as -15°F. However, the installer must ensure he has adequately softened the joining surfaces with a primer. In addition, cement must be kept warm to prevent excessive thickening and gelation in cold weather.

INITIAL SET SCHEDULE FOR PVC SOLVENT CEMENTS*			
Temp. Range	Pipe Size 1/2” - 1-1/4”	Pipe Size 1-1/2” - 2”	Pipe Size 2-1/2” - 6”
60° - 100°F	2 min.	3 min.	30 min.
40° - 60°F	5 min.	8 min.	2 hrs.
0° - 40°F	10 min.	15 min.	12 hrs.

NOTE: Initial set schedule is the necessary time to allow before the joint can be carefully handled.

*These figures are estimates based on our laboratory tests. Due to the many variables in the field, these figures should be used as a general guide only.

After initial set, the joints will withstand the stresses of a normal installation. (A misaligned installation will cause excessive stresses in the joint). For long runs of pipe, care should be taken not to disturb joints for 1/2 to 1 1/2 hours before handling or burying.

AVERAGE NUMBER OF JOINTS PER PINT OR QUART OF CEMENT					
Nominal Pipe Size Inches	# of Joints per Pint	# of Joints per Quart	Nominal Pipe Size Inches	# of Joints per Pint	# of Joints per Quart
1/2	350	700	2-1/2	40	80
3/4	200	400	3	35	70
1	150	300	3-1/2	30	60
1-1/4	110	220	4	24	48
1-1/2	80	160	5	10	20
2	45	90	6	8	16

BENDING

PVC is a thermoplastic material that, when heated, becomes soft and pliable. As a result, its shape can be altered.

A flameless heat source is recommended to heat the pipe. AN OPEN FLAME SHOULD NOT BE USED. An electric unit or an infra-red propane unit is recommended for heating the pipe.

The necessary temperature for bending Scepter Rigid PVC pipe is 260°F. The pipe must be heated evenly over an area approximately ten times the diameter of the pipe before any attempt at bending is made. Bending the pipe when it has not been thoroughly heated will cause the pipe to “kink.” With proper care and a little practice, the bend will form easily.

Cooling the pipe with cold air or water will cause “spring back.” Allow a few extra degrees of overbending to compensate for this phenomenom. The maximum bending radius shall be six times the internal diameter according to the National Electrical Code.

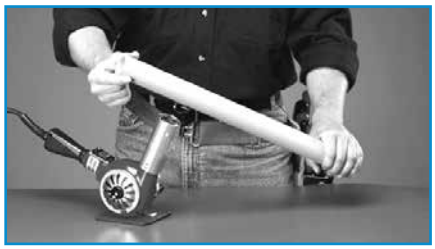

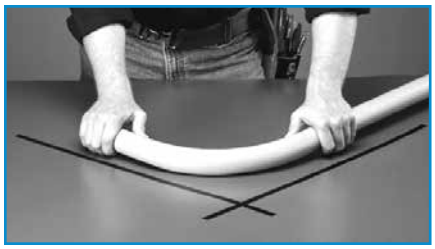

EXPANSION / CONTRACTION

All conduit pipe and fittings expand and contract with changes in temperature. All materials' expansion and contraction rates are represented by coefficients of thermal expansion.

A general rule of thumb is that for every 100°F temperature change in a 100 ft. run of PVC conduit, the conduit will undergo 3.6" of expansion or contraction.

Use of Expansion Joints

In installations where the expected temperature variation exceeds 25°F expansion joints must be used. An expansion joint consists of two tubes, one telescoping inside another. When installing expansion joints alignment of the piston and barrel is important. Straps should be placed approximately one foot on either side of the joint to ensure that any movement is directed squarely into the joint.

When expansion joints are required the following steps should be followed:

1. Determine number of joints required:

Use the following formula to calculate the total expected expansion in the run.

$$\text{Total expansion} = \frac{\text{Total temp. change °F}}{10} \times \frac{\text{Length of run ft.}}{100} \times .36$$

The expansion joints should then be installed at even intervals throughout the run.

$$\text{Number of joints} = \frac{\text{Total expansion}}{4}$$

Example:

Assume a 200 ft. run of conduit is to be installed in an unheated building where the temperature will vary from 10°F in the winter to 110°F in the summer. The installation will be carried out when the temperature is 60°F.

Using step 1 we determine the number of joints required.

$$\text{Total Expansion} = \frac{100\ °F}{10} \times \frac{200\ ft.}{100} \times .36 = 7.2"$$

$$\text{Number of joints} = \frac{7.2}{4} = 1.8$$

Note: Always round off to the next highest number. Therefore in this example we see that two expansion joints are necessary.

Expansion Comparison

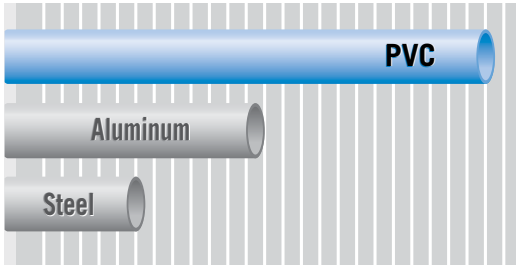

Rule of Thumb for PVC Expansion

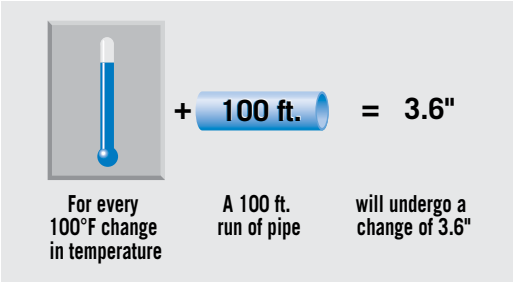

PVC Pipe Length Variation due to Temperature Change (°F) Coefficient = 3.6 x 10-4 in./ft./°F

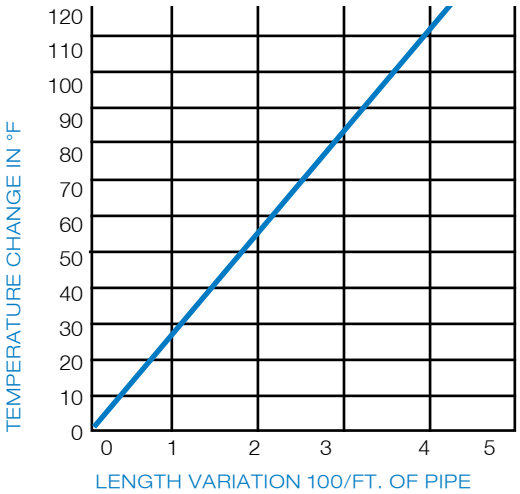

2. Determine Piston Opening:

The expansion joint must be installed to allow both expansion and contraction of the conduit run. Because installation temperatures may vary, the piston setting must be determined. The correct piston opening is determined using the following formula:

$$\text{Piston (in.)} = \frac{\text{max. temperature (°F) - installing temperature (°F)} \times 4}{\text{temperature change (°F)}}$$

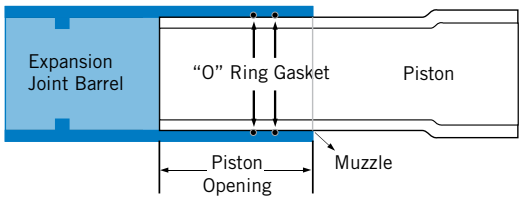

Example:

Using step 2 we determine the proper piston opening.

$$\text{Piston (in.)} = \frac{110\ (°F) - 60\ (°F)}{100\ (°F)} \times 4" = 2"$$

Therefore this piston should be opened 2 inches when the joints are installed.

Size (in)	Compressed Length (in)	Travel (in)
1/2	8.00	4
3/4	8.00	4
1	8.50	4
1-1/4	9.00	4
1-1/2	9.00	4
2	9.25	4
2-1/2	14.25	8
3	14.25	8
3-1/2	14.90	8
4	14.90	8
5	26.00	8
6	26.00	8

Location of Expansion Joints

Proper functioning of an expansion joint depends on three procedures:

1. The correct placement of the expansion joint.
2. The proper installation of rigid PVC conduit and the expansion joint.
3. The proper placement and fastening of support straps.

One Expansion Joint - Figure 1

If only one expansion joint is needed between two boxes, the barrel of the joint should be rigidly fastened close to the first box. Rigid PVC conduit should then be loosely supported with straps, allowing the conduit to move freely as it expands and contracts.

Figure 1

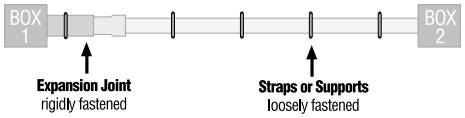

Two Expansion Joints - Figure 2

If two expansion joints are needed, the joints should be firmly fastened back to back at the center of the run. Rigid PVC conduit should be loosely supported with straps, allowing the conduit to move freely as it expands and contracts.

Figure 2

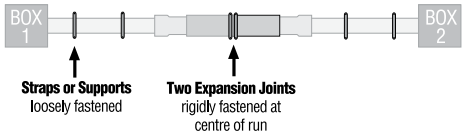

Two Expansion Joints (Alternative) - Figure 3

Alternatively, the center of the run and the two expansion joints (located at the boxes) should be rigidly fastened. All other support straps should be loosely fastened.

Figure 3

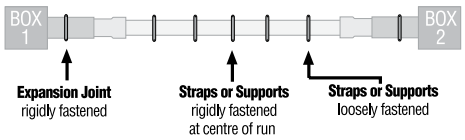

Three or More Expansion Joints - Figure 4

If more than two joints are needed in a very long run, they should be put in a series, one after the other. Each barrel must be rigidly fastened while conduit is loosely supported with straps allowing the conduit to move freely as it expands and contracts. When installed in a series, each section acts independently of the other. Spacing of conduit supports must be in accordance with NEC article 347-8.

Figure 4

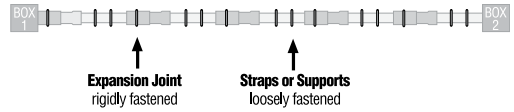

INSTALLATION OF EXPANSION JOINTS

Installation recommendations:

- Expansion joints should be mounted so the piston can travel in a straight line in the barrel. If the alignment is not straight, the piston will bind, preventing the joint from working correctly.
- The expansion joint barrel should be clamped tight, but the conduit mounted loose enough in its hangers to allow for movement as it expands and contracts.
- Kraloy nonmetallic straps are correctly sized and designed for proper support, and must be used to secure the conduit.
- When expansion joints are used in a vertical position, the piston should be mounted in a downward position so dirt cannot deposit between the barrel and piston at the muzzle of the expansion joints.

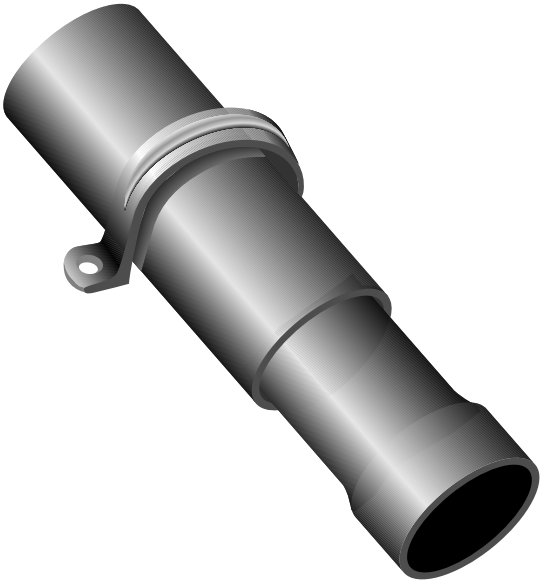

Common Mistakes

Three common mistakes are:

1. Forgetting to use expansion joints.
2. Not using enough expansion joints.
3. Overtightening of support straps.

It is more cost effective to use more expansion joints than needed, rather than too few. It is difficult to correct the problem after conductors are installed and in service. Failure to accommodate expansion/contraction may result in pipe fracture.

Installation of the One Piece Expansion Joint (OPEJ)

1. Solvent cement the PVC conduit into the conduit hub of the OPEJ and firmly secure the PVC conduit on the solvent cement side of the OPEJ using Kraloy pipe straps.
2. Set the expansion fitting by marking a line 11/2” from the end of the conduit to be inserted and insert the conduit into the OPEJ to this mark.
3. Secure and support the conduit raceway using Kraloy pipe straps.

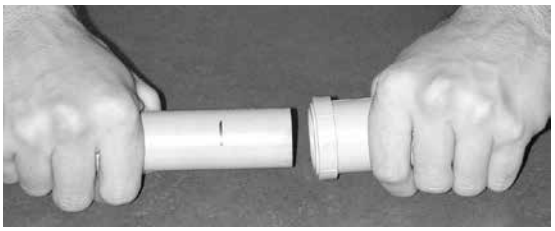

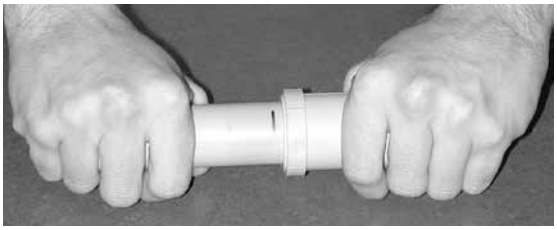

CONDUIT ELBOWS

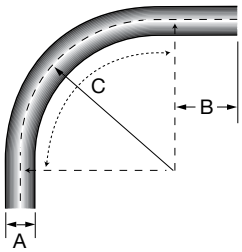

Size inches	Part Number	Product Code	A inches	B inches	C inches
90° Elbows Schedule 40 Standard Radius					
1/2	40STD0590	078540	0.840	1.500	4.000
3/4	40STD0790	078541	1.050	1.500	4.500
1	40STD1090	078542	1.315	1.875	5.750
1-1/4	40STD1290	078543	1.660	2.000	7.250
1-1/2	40STD1590	078544	1.900	2.000	8.250
2	40STD2090	078545	2.375	2.000	9.500
2-1/2	40STD2590	078546	2.875	3.000	10.500
3	40STD3090	078547	3.500	3.125	13.000
3-1/2	40STD3590	078548	4.000	3.250	15.000
4	40STD4090	078549	4.500	3.375	16.000
5	40STD5090	078550	5.563	3.625	24.000
6	40STD6090	078551	6.625	3.750	30.000

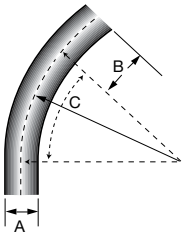

45° Elbows Schedule 40 Standard Radius					
1/2	40STD0545	078552	0.840	1.500	4.000
3/4	40STD0745	078553	1.050	1.500	4.500
1	40STD1045	078554	1.315	1.875	5.750
1-1/4	40STD1245	078555	1.660	2.000	7.250
1-1/2	40STD1545	078556	1.900	2.000	8.250
2	40STD2045	078557	2.375	2.000	9.500
2-1/2	40STD2545	078558	2.875	3.000	10.500
3	40STD3045	078559	3.500	3.125	13.000
3-1/2	40STD3545	078560	4.000	3.250	15.000
4	40STD4045	078561	4.500	3.375	16.000
5	40STD5045	078562	5.563	3.625	24.000
6	40STD6045	078563	6.625	3.750	30.000

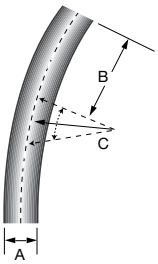

30° Elbows Schedule 40 Standard Radius					
1/2	40STD0530	078564	0.840	1.500	4.000
3/4	40STD0730	078565	1.050	1.500	4.500
1	40STD1030	068622	1.315	1.875	5.750
1-1/4	40STD1230	078567	1.660	2.000	7.250
1-1/2	40STD1530	078568	1.900	2.000	8.250
2	40STD2030	078569	2.375	2.000	9.500
2-1/2	40STD2530	078570	2.750	3.000	10.500
3	40STD3030	078571	3.500	3.125	13.000
3-1/2	40STD3530	078572	4.000	3.250	15.000
4	40STD4030	078573	4.500	3.375	16.000
5	40STD5030	078574	5.563	3.625	24.000
6	40STD6030	078575	6.625	3.750	30.000

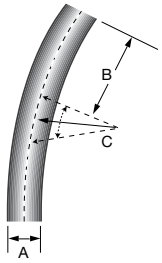

Size inches	Part Number	Product Code	D inches	T inches	R inches
22-1/2º Elbows Schedule 40 Standard Radius					
1-1/2	40STD1522	078580	1.900	2.000	8.25
2	40STD2022	078581	2.375	2.000	9.50
2-1/2	40STD2522	078582	2.875	3.000	10.50
3	40STD3022	078583	3.500	3.125	13.00
3-1/2	40STD3522	078584	4.000	3.250	15.00
4	40STD4022	078585	4.500	3.375	16.00
5	40STD5022	078586	5.563	3.625	24.00
6	40STD6022	078587	6.625	3.750	30.00

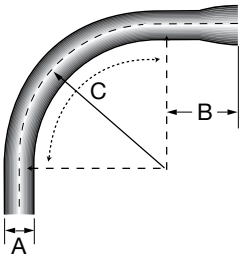

90º Elbows Schedule 40 - Bell End					
1/2	B40STD0590	078588	0.840	1.500	4.000
3/4	B40STD0790	078589	1.050	1.500	4.500
1	B40STD1090	078590	1.315	1.875	5.750
1-1/4	B40STD1290	078591	1.660	2.000	7.250
1-1/2	B40STD1590	078592	1.900	2.000	8.250
2	B40STD2090	078593	2.375	2.000	9.500
2-1/2	B40STD2590	078594	2.875	3.000	10.500
3	B40STD3090	078595	3.500	3.125	13.000
3-1/2	B40STD3590	078596	4.000	3.250	15.000
4	B40STD4090	078597	4.500	3.375	16.000
5	B40STD5090	068430	5.563	3.625	24.000
6	B40STD6090	078599	6.625	3.750	30.000

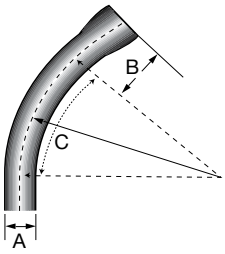

45º Elbows Schedule 40 - Bell End					
1/2	B40STD0545	078600	0.840	1.500	4.000
3/4	B40STD0745	078601	1.050	1.500	4.500
1	B40STD1045	078602	1.315	1.875	5.750
1-1/4	B40STD1245	078603	1.660	2.000	7.250
1-1/2	B40STD1545	078604	1.900	2.000	8.250
2	B40STD2045	078605	2.375	2.000	9.500
2-1/2	B40STD2545	078606	2.875	3.000	10.500
3	B40STD3045	078607	3.500	3.125	13.000
3-1/2	B40STD3545	078608	4.000	3.250	15.000
4	B40STD4045	078609	4.500	3.375	16.000
5	B40STD5045	078610	5.563	3.625	24.000
6	B40STD6045	068572	6.625	3.750	30.000

CONDUIT ELBOWS

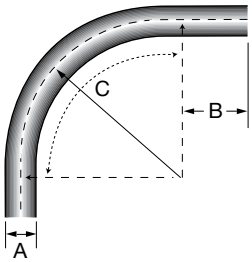

90º Elbows Schedule 80 Standard Radius

Size inches	Part Number	Product Code	D inches	T inches	R inches
1/2	80STD0590	078620	0.840	1.500	4.000
3/4	80STD0790	078621	1.050	1.500	4.500
1	80STD1090	078622	1.315	1.875	5.750
1-1/4	80STD1290	078623	1.660	2.000	7.250
1-1/2	80STD1590	078624	1.900	2.000	8.250
2	80STD2090	078625	2.375	2.000	9.500
2-1/2	80STD2590	078626	2.875	3.000	10.500
3	80STD3090	078627	3.500	3.125	13.000
4	80STD4090	078628	4.500	3.375	16.000
5	80STD5090	078629	5.563	3.625	24.000
6	80STD6090	078630	6.625	3.750	30.000

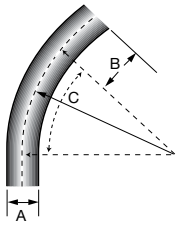

45º Elbows Schedule 80 Standard Radius

1/2	80STD0545	078631	0.840	1.500	4.000
3/4	80STD0745	078632	1.050	1.500	4.500
1	80STD1045	078633	1.315	1.875	5.750
1-1/4	80STD1245	078634	1.660	2.000	7.250
1-1/2	80STD1545	078635	1.900	2.000	8.250
2	80STD2045	078636	2.375	2.000	9.500
2-1/2	80STD2545	078637	2.875	3.000	10.500
3	80STD3045	078638	3.500	3.125	13.000
4	80STD4045	078639	4.500	3.375	16.000
5	80STD5045	078640	5.563	3.625	24.000
6	80STD6045	078641	6.625	3.750	30.000

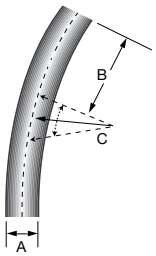

30º Elbows Schedule 80 Standard Radius

1/2	80STD0530	078642	0.840	1.500	4.000
3/4	80STD0730	078643	1.050	1.500	4.500
1	80STD1030	078644	1.315	1.875	5.750
1-1/4	80STD1230	078645	1.660	2.000	7.250
1-1/2	80STD1530	078646	1.900	2.000	8.250
2	80STD2030	078647	2.375	2.000	9.500
2-1/2	80STD2530	078648	2.750	3.000	10.500
3	80STD3030	078649	3.500	3.125	13.000
4	80STD4030	078650	4.500	3.375	16.000
5	80STD5030	078651	5.563	3.625	24.000
6	80STD6030	068560	6.625	3.750	30.000

CONDUIT ELBOWS - SCHEDULE 40 SPECIAL RADIUS (PLAIN END)

Size inches	Degree Bend	18” Radius Product Code	24” Radius Product Code	30” Radius Product Code	36” Radius Product Code	48” Radius Product Code	60” Radius Product Code
1	90	068702	068722	068742	068762	068782	#
	45	068802	068822	068842	068862	068882	#
	30	068902	068922	068942	068962	068982	#
	22-1/2	078853	078035	#	278288	#	#
1-1/4	90	068703	068723	068743	068763	068783	#
	45	068803	068823	068843	068863	068883	#
	30	068903	068923	068943	068963	068983	#
	22-1/2	068513	078667	#	#	#	#
1-1/2	90	568704	068724	068744	068764	068784	#
	45	068804	068824	068844	068864	068884	#
	30	068904	068924	068944	068964	068984	#
	22-1/2	068523	078668	#	#	#	#
2	90	068705	068725	068745	068765	068785	068113
	45	068805	068825	068845	068865	068885	#
	30	068905	068925	068945	068965	068985	#
	22-1/2	068514	068547	#	068515	#	#
2-1/2	90	068706	068726	068746	068766	068786	178168
	45	068806	068826	068846	068866	068886	#
	30	068906	068926	068946	068966	068986	#
	22-1/2	068524		#	278229	#	#
3	90	068707	068727	068747	068767	068787	068114
	45	068807	068827	068847	068867	068887	#
	30	068907	068927	068947	068967	068987	#
	22-1/2	068516	068525	#	068517	068526	#
3-1/2	90	Use Standard Schedule 40 Elbow	068728	068748	068768	068788	178169
	45		068828	068848	068868	068888	#
	30		068928	068948	068968	068988	#
	22-1/2		068130	#	#	#	#
4	90	Use Standard Schedule 40 Elbow	068729	068749	068769	068789	068112
	45		068829	068849	068869	068889	078011
	30		068929	068949	068969	068989	#
	22-1/2		068518	068519	068520	068521	068111
5	90	Use Standard Schedule 40 Elbow		068751	068771	068791	068115
	45			068851	068871	068891	078615
	30			068951	068971	068991	068132
	22-1/2			068529	068522	#	#
6	90	Use Standard Schedule 40 Elbow			068772	068792	078937
	45				068872	068892	078220
	30				068972	068992	178255
	22-1/2				068528	068527	078221
8	90	-	-	-	-	068052	#
	45	-	-	-	-	068082	#
	22-1/2	-	-	-	-	068081	#
	11-1/4	-	-	-	-	068080	#

Note: 1) # indicates available on request. Material is **non-cancelable** and **non-returnable.**
2) Larger Radius Elbows are available on request and are **non-cancelable** and **non-returnable.**

CONDUIT ELBOWS - SCHEDULE 40 SPECIAL RADIUS (BELLED ONE END)

Size inches	Degree Bend	18” Radius Product Code	24” Radius Product Code	36” Radius Product Code	48” Radius Product Code
2	90	068014	068030	068054	068078
	45	068015	068033	068055	068079
2-1/2	90	068016	068034	068056	068086
	45	068017	068035	078508	068090
3	90	068018	068036	068058	068091
	45	068019	068037	078513	068092
3-1/2	90	Use Std. Sch. 40 Radius (15”)	068038	068070	068093
	45		068039	068071	068094
4	90	Use Std. Sch. 40 Radius (16”)	068050	068072	068095
	45		078945	068073	068096
5	90	Use Std. Sch. 40 Radius (24”)		068074	068097
	45			068075	068098
6	90	Use Std. Sch. 40 Radius (30”)		068076	068099
	45			068077	068106

CONDUIT ELBOWS - SCHEDULE 80 SPECIAL RADIUS (PLAIN END)

Size inches	Degree Bend	18” Radius Product Code	24” Radius Product Code	30” Radius Product Code	36” Radius Product Code	48” Radius Product Code
1	90	068710	078374	#	068049	068541
	45	#	#	#	178194	#
1-1/4	90	068711	068735	#	#	068542
	45	#	078114	#	#	#
1-1/2	90	068712	078854	#	068545	068543
	45	178104	078113	#	#	#
2	90	068713	068736	078910	068775	068544
	45	#	068530	#	068534	078198
2-1/2	90	068714	068737	078524	068776	068548
	45	#	068531	#	068535	#
3	90	068715	068738	078525	068777	068794
	45	#	068532	#	068536	#
4	90	068716	068739	068549	068778	068795
	45	#	068533	#	068537	078911
5	90	Use Standard Schedule 80 Radius (24”)		078373	068779	068796
	45			#	068538	068546
6	90	Use Standard Schedule 80 Radius (30”)			068540	068797
	45				068539	078966

Note: 1) # indicates available on request. Material is **non-cancelable** and **non-returnable.**
2) 30° and 22½° Elbows are available on request.
3) Larger Radius Elbows are available on request and are **non-cancelable** and **non-returnable.**

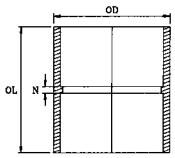

Size inches	Part Number	Product Code	N Min inches	OD inches	OL inches
Couplings					
1/2	CP05	078001	0.055	1.062	1.410
3/4	CP07	078002	0.070	1.265	1.535
1	CP10	078003	0.095	1.545	1.860
1-1/4	CP12	078004	0.110	1.945	2.020
1-1/2	CP15	078005	0.084	2.180	2.255
2	CP20	078006	0.095	2.683	2.390
2-1/2	CP25	078007	0.170	3.240	3.120
3	CP30	078008	0.166	3.940	3.340
3-1/2	CP35	078009	0.200	4.480	3.615
4	CP40	078010	0.225	5.000	3.765
5	CP50	078012	0.270	6.120	4.170
6	CP60	078014	0.255	7.285	4.875
8	CP80	178192	-	-	-

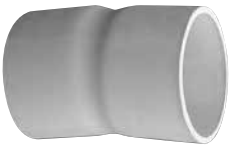

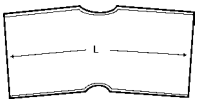

Size inches	Part Number	Product Code	L inches
5º Couplings B x B			
2	5EC20	078049	4.0
3	5EC30	078051	6.0
4	5EC40	078053	7.0
5	5EC50	078055	7.5
6	5EC60	077106	11.0

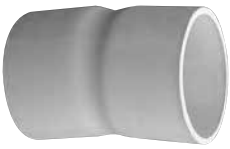

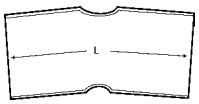

5º Couplings B x S

2	5EC20BS	078025	4.0
3	5EC30BS	078026	6.0
4	5EC40BS	078028	7.0
6	5EC60BS	078030	11.0

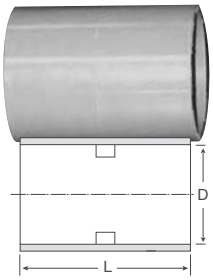

Size inches	Part Number	Product Code	L inches	D Max inches
Long Line Couplings				
2	LLC20	078063	3.675	2.399
2-1/2	LLC25	078065	4.28	2.897
3	LLC30	078066	4.80	3.523
4	LLC40	078067	6.20	4.524
5	LLC50	078068	8.22	5.603
6	LLC60	078069	8.22	6.669

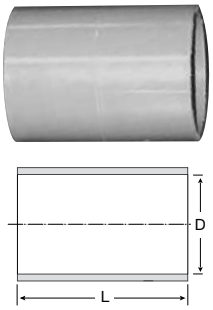

Size inches	Part Number	Product Code	L inches	D Min inches	D Max inches
Repair Coupling Sleeves					
1-1/2	REC15	077292	2.300	1.912	1.924
2	REC20	078617	2.405	2.367	2.399
2-1/2	REC25	078041	3.450	2.883	2.897
3	REC30	078042	3.600	3.507	3.523
4	REC40	078044	3.920	4.506	4.524
5	REC50	077297	4.275	5.583	5.603
6	REC60	077298	4.620	6.647	6.669

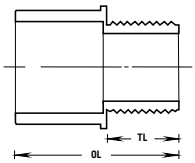

Size inches	Part Number	Product Code	OL inches	TL Min inches
Terminal Adapters				
1/2	TA05	078084	1.305	0.550
3/4	TA07	078085	1.435	0.565
1	TA10	078086	1.775	0.800
1-1/4	TA12	078087	1.855	0.800
1-1/2	TA15	078088	1.980	0.800
2	TA20	078089	2.070	0.810
2-1/2	TA25	078090	2.480	0.820
3	TA30	078091	2.580	0.765
3-1/2	TA35	078092	2.815	0.920
4	TA40	078093	2.870	0.870
5	TA50	078094	3.710	1.390
6	TA60	078095	3.540	1.080
8	TA80	178190	-	-

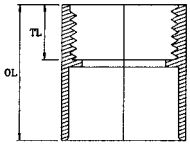

Size inches	Part Number	Product Code	OL inches	TL Min inches
Female Adapters				
1/2	FA05	078070	1.400	0.700
3/4	FA07	078071	1.550	0.765
1	FA10	078072	2.000	1.000
1-1/4	FA12	078073	2.065	1.000
1-1/2	FA15	078074	2.185	1.000
2	FA20	078075	2.260	1.000
2-1/2	FA25	078076	2.290	1.000
3	FA30	078077	2.950	1.145
3-1/2	FA35	078078	4.100	1.800
4	FA40	078079	3.120	1.150
5	FA50	078080	3.750	1.520
6	FA60	078081	4.062	1.500
8	FA80	178189	-	-

Size inches	Part Number	Product Code
Reducer Bushings		
3/4 x 1/2	MR0705	078353
1 x 1/2	MR1005	078354
1 x 3/4	MR1007	078355
1-1/4 x 3/4	MR1207	078356
1-1/4 x 1	MR1210	078357
1-1/2 x 1	MR1510	078359
1-1/2 x 1-1/4	MR1512	078360
2 x 1	MR2010	078361
2 x 1-1/4	MR2012	078363
2 x 1-1/2	MR2015	078362
2-1/2 x 2	MR2520	078364
3 x 2	MR3020	078365
3 x 2-1/2	MR3025	078366
4 x 2	MR4020	078369
4 x 3	MR4030	078367
4 x 3-1/2	MR4035	078368

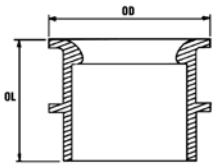

Size inches	Part Number	Product Code	OD inches	OL inches
End Bells				
1/2	MEB05	078288	1.250	1.000
3/4	MEB07	078289	1.500	1.000
1	MEB10	078290	1.745	1.120
1-1/4	MEB12	078291	2.085	1.200
1-1/2	MEB15	078292	2.950	1.500
2	MEB20	078293	3.050	1.440
2-1/2	MEB25	078294	3.585	1.790
3	MEB30	078295	3.865	1.910
3-1/2	MEB35	078296	4.437	2.093
4	MEB40	078297	4.870	2.175
5	MEB50	078298	6.187	2.375
6	MEB60	078299	7.187	2.562
8*	MEB80	278123	-	-
8**	FEB80	077652		

* Molded
** Fabricated

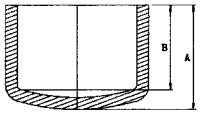

Size inches	Part Number	Product Code	A inches	B inches
End Caps				
1/2	EC05	078314	1.410	1.000
3/4	EC07	078315	1.630	1.125
1	EC10	078316	1.860	1.187
1-1/4	EC12	078317	2.005	1.275
1-1/2	EC15	078318	2.115	1.500
2	EC20	078319	2.445	1.812
2-1/2	EC25	078320	2.915	2.125
3	EC30	078321	3.050	2.375
3-1/2	EC35	277085	2.150	2.625
4	EC40	078323	3.260	3.050
5	EC50	077431	4.375	3.000
6	EC60	078325	5.180	4.125
8	EC80	178191	-	-

Size (in.)	Part Number	Product Code

Fabricated Swedge Reducer Couplings Soc x Soc

2 x 1-1/4	SW2012	078398
2 x 1-1/2	SW2015	078399
2-1/2 x 2	SW2520	078400
3 x 2	SW3020	078401
3 x 2-1/2	SW3025	078402
3-1/2 x 3	SW3530	078404
4 x 2	SW5535	077322
4 x 3	SW4030	078407
4 x 3-1/2	SW4035	078408
5 x 4	SW5040	078409
6 x 5	SW6050	078410

Tapered Conduit Plugs

2 - 2-1/2	UTP20	078424
3 - 3-1/2	UTP30	078425
4	UTP40	078427
5	UTP50	078428
6	UTP60	078429
8	UTP80	077648

Threaded Reducer Bushings

3/4 x 1/2	1825	077314
1 x 1/2	1826	077315
1 x 3/4	1827	077316

CONDUIT EXPANSION FITTINGS

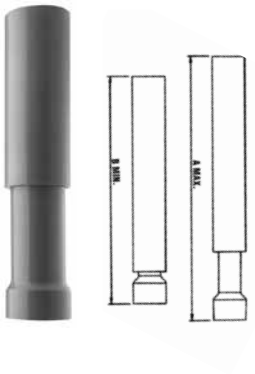

Size inches	Part Number	Product Code	A Max inches	B Min inches
Expansion Joints				
1/2	EJ05	277156	12.00	8.00
3/4	EJ07	078329	12.00	8.00
1	EJ10	078330	12.50	8.50
1-1/4	EJ12	078331	13.00	9.00
1-1/2	EJ15	078332	13.00	9.00
2	EJ20	078333	13.25	9.25
2-1/2	EJ25	078334	22.25	14.25
3	EJ30	078336	22.25	14.25
3-1/2	EJ35	078337	22.90	14.90
4	EJ40	078338	22.90	14.90
5	*EJ50	078339	34.00	26.00
6	*EJ60	078340	34.00	26.00

* indicates Fabricated fittings

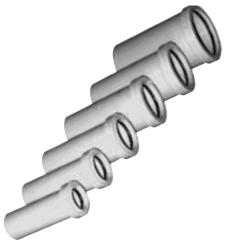

Size (in.)	Part Number	Product Code
Slip Meter Risers (NEC Article 300)		
2’ slip sleeve / 2” TA	SMR20TA	068063
2’ slip sleeve / 2-1/2” TA	SMR25TA	068064
2’ slip sleeve / 3” TA	SMR30TA	068373
2’ slip sleeve / 4” TA	SMR40TA	068065
Expansion Joint c/w Terminal Adapter		
2” x 4” of travel	EJ35TA	077680
2-1/2” x 12” of travel	EJ40TA	077398
3” x 8” of travel	EJ45TA	077681
4” x 8” of travel	EJ55TA	077682
One Piece Expansion Joints		
1/2	OPEJ05	078240
3/4	OPEJ07	078209
1	OPEJ10	078208
1-1/4	OPEJ12	078204
1-1/2	OPEJ15	078045
2	OPEJ20	078388
Expansion and Deflection Fittings Assemblies		
2	SE-J-35	077889
3	SE-J-45	077890
4	SE-J-55	077891

Size (in.)	Part Number	Product Code
Pipe Straps, PVC 2 Hole		
1/2	PS05	078375
3/4	PS07	078376
1	PS10	078377
1-1/4	PS12	078378
1-1/2	PS15	078379
2	PS20	078380
2-1/2	PS25	178108
3	PS30	178109
4	PS40	178110

Pipe Straps, PVC Coated Steel 2 Hole		
2	PSC20	078190
2-1/2	PSC25	078191
3	PSC30	078192
3-1/2	PSC35	078193
4	PSC40	078194
5	PSC50	078195
6	PSC60	078196

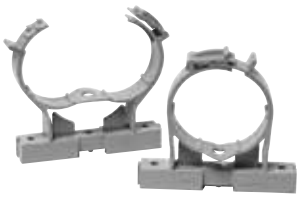

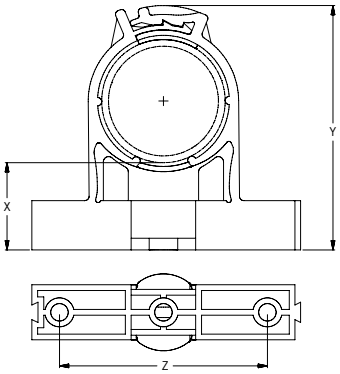

Size inches	Part Number	Product Code	X inches	Y inches	Z inches
Conduit Clamps & Spacers					
1/2	CCS10	278106	1.191	2.414	1.824
3/4	CCS15	278095	1.195	2.660	2.106
1	CCS20	278096	1.215	2.962	2.443
1-1/4	CCS25	278097	1.182	3.300	2.855
1-1/2	CCS30	278098	1.193	3.600	3.170
2	CCS35	278099	1.195	4.135	3.785
Base	CCS-B	278107	-	-	-

ACCESS FITTINGS

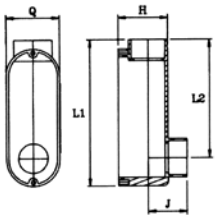

Size inches	Part Number	Product Code	L1 inches	L2 inches	H inches	J inches	Q inches
Type 'LB' Access Fittings							
1/2	LB05	078140	4.285	3.290	1.500	1.175	1.312
3/4	LB07	078141	4.970	3.980	1.625	1.375	1.500
1	LB10	078142	5.900	4.656	2.010	1.665	1.750
1-1/4	LB12	078143	7.650	6.060	2.510	1.910	2.450
1-1/2	LB15	078144	7.812	6.180	2.520	2.187	2.468
2	LB20	078145	9.970	8.055	3.455	2.500	3.062
2-1/2	LB25	078146	13.750	11.843	4.625	3.375	4.625
3	LB30	078147	14.250	11.843	4.625	3.405	4.625
3-1/2	LB35	078148	15.500	12.750	5.450	4.210	5.445
4	LB40	078149	15.500	12.750	5.450	4.210	5.445

Includes: Gasket, Cover & Screws

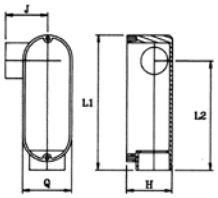

Type 'LR' Access Fittings							
1/2	LR05	078164	4.625	3.615	1.490	1.405	1.310
3/4	LR07	078165	5.260	4.265	1.665	1.540	1.500
1	LR10	078166	6.125	4.875	2.000		1.750
1- 1/4	LR12	078167	8.125	6.500	2.500	2.250	2.500
1-1/2	LR15	078168	8.187	6.500	2.750	2.312	2.500
2	LR20	078169	10.562	8.625	3.500	2.687	3.125
2-1/2	LR25	078170	13.812	12.125	4.625	5.562	4.625
3	LR30	078171	14.250	12.125	4.625	5.562	4.625
3-1/2	LR35	078172	15.656	14.250	5.484	6.203	5.468
4	LR40	078173	15.500	14.250	5.484	6.203	5.468

Includes: Gasket, Cover & Screws

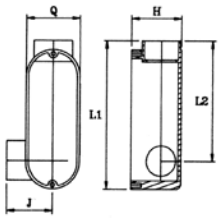

Type 'LL' Access Fittings							
1/2	LL05	078152	4.625	3.500	1.500	1.375	1.312
3/4	LL07	078153	5.250	4.260	1.675	1.545	1.500
1	LL10	078154	6.170	4.925	2.000	1.820	1.750
1-1/4	LL12	078155	8.187	6.500	2.500	2.250	2.500
1-1/2	LL15	078156	8.250	6.500	2.750	2.312	2.500
2	LL20	078157	10.500	8.625	3.500	2.687	3.125
2-1/2	LL25	078158	13.875	12.125	4.625	5.562	4.625
3	LL30	078159	14.250	12.125	4.625	5.562	4.625
3-1/2	LL35	078160	15.656	14.250	5.484	6.203	5.468
4	LL40	078161	15.500	14.250	5.484	6.203	5.468

Includes: Gasket, Cover & Screws

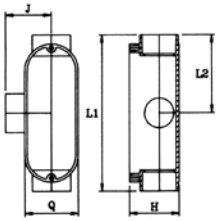

Size inches	Part Number	Product Code	L1 inches	L2 inches	H inches	J inches	Q inches
Type 'T' Access Fittings							
1/2	T05	078176	4.565	2.275	1.500	1.315	1.315
3/4	T07	078177	5.330	2.685	1.625	1.490	1.490
1	T10	078178	6.390	3.195	2.000	1.770	1.740
1-1/4	T12	078179	9.125	6.500	2.500	2.250	2.500
1-1/2	T15	078180	9.250	6.500	2.750	2.312	2.500
2	T20	078181	11.375	8.625	3.500	2.687	3.125
2-1/2	T25	078182	17.125	12.125	4.625	5.562	4.625
3	T30	078183	17.562	12.125	4.625	5.562	4.625
3-1/2	T35	078184	19.125	14.250	5.484	6.203	5.468
4	T40	078185	19.125	14.250	5.484	6.203	5.468

Includes: Gasket, Cover & Screws

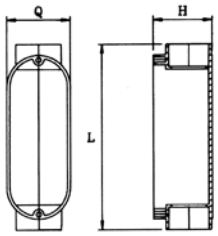

Size inches	Part Number	Product Code	L inches	H inches	Q inches
Type 'C' Access Fittings					
1/2	C05	078116	5.230	1.490	1.330
3/4	C07	078117	5.880	1.675	1.510
1	C10	078118	6.937	2.000	1.750
1-1/4	C12	078119	9.125	2.500	2.500
1-1/2	C15	078120	9.250	2.750	2.500
2	C20	078121	11.437	3.500	3.125
2-1/2	C25	078122	17.125	4.625	4.625
3	C30	078123	17.652	4.625	4.625
3-1/2	C35	078124	19.125	5.484	5.468
4	C40	078125	19.125	5.484	5.468

Includes: Gasket, Cover & Screws

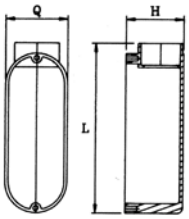

Type 'E' Access Fittings					
1/2	E05	078128	4.635	1.500	1.312
3/4	E07	078129	5.250	1.675	1.515
1	E10	078130	6.170	2.000	1.750
1-1/4	E12	078131	8.187	2.500	2.500
1-1/2	E15	078132	8.250	2.750	2.500
2	E20	078133	10.500	3.500	3.125
2-1/2	E25	078134	13.875	4.625	4.625

Includes: Gasket, Cover & Screws

ACCESS FITTINGS

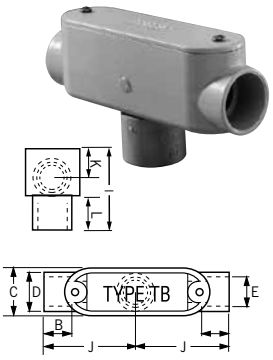

Size (in.)	Part Number	Product Code
Access Fittings* Type TB		
1/2	STB10S	077451
3/4	STB20S	077452
1	STB30S	077453
1-1/4	STB40S	077454
1-1/2	STB50S	077455
2	STB60S	077456

Not UL listed.

Access Fitting Dimensions*

Size (in)	A (in)	B (in)	C (in)	D (in)	E (in)	F (in)
1/2	5.6	0.6	1.3	1.1	0.8	4.3
3/4	5.6	0.8	1.5	1.3	1.1	5.4
1	6.5	0.9	1.7	1.6	1.3	6.3
1-1/4	7.9	1.1	2.3	2.0	1.7	7.6
1-1/2	8.5	1.1	2.7	2.3	1.9	8.3
2	10.9	1.2	3.2	2.8	2.4	10.5
2-1/2	14.6	1.8	4.5	4.0	2.9	13.6
3	14.6	1.9	4.5	4.0	3.5	13.6
3-1/2	17.0	2.1	5.5	5.0	4.0	16.0
4	17.0	2.1	5.5	5.0	4.5	16.0

Size (in)	G (in)	H (in)	I (in)	J (in)	K (in)	L (in)
1/2	4.1	1.3	2.5	2.3	1.0	0.8
3/4	4.1	1.3	2.5	2.8	1.0	0.8
1	4.8	1.5	2.1	3.3	1.1	1.1
1-1/4	5.8	1.8	3.6	4.0	1.6	1.0
1-1/2	6.5	1.8	3.9	4.3	1.7	1.1
2	8.2	2.3	4.5	5.4	2.0	1.2
2-1/2	9.8	3.8	6.2	7.3	2.6	-
3	10.9	2.7	6.2	7.3	2.6	-
3-1/2	11.5	4.5	7.5	8.5	3.0	-
4	11.5	4.5	7.5	8.5	3.0	-

* Notes: All access fittings are UL listed for wet locations.
Supplied with threaded brass inserts, brass screws and PVC gasketing.
Stainless steel screws are available upon request.

Size (in.)	Part Number	Product Code
Service Entrance Fittings		
1/2	MH05	078302
3/4	MH07	078303
1	MH10	078304
1-1/4	MH12	078305
1-1/2	MH15	078306
2	MH20	078307
2-1/2	MH25	078308
3	MH30	078309
3-1/2	MH35	078310
4	MH40	078311

Pull Elbow

1/2 & 3/4	PULEL0705	078386

The “two-in-one” access pull elbow reduces your inventory costs (3/4” hub fitting supplied with 3/4” x 1/2” reducers). The pull elbow is approved for wet location use and is manufactured from high impact, nonconducting and noncorroding PVC.

Size S x H (in)	Part Number	Product Code	OL (in)
Offset Terminal Adapters			
1-1/4	MO12	078351	4.240
2	MO20	078352	4.360

NONMETALLIC STRAIN RELIEF CONNECTORS

Kraloy's Nonmetallic Strain Relief Connectors are supplied with all the components you need for a complete connection. The connector body, a selection of grommets and compression rings accepting a range of cord dimensions, a sealing 'O' ring and metallic locknut are all supplied in one package. Available in 1/2" and 3/4" threaded hub and 3/4" PVC socket solvent weld configurations to accommodate a variety of applications.

Size inches	Part Number	Product Code
Threaded Strain Relief Connector		
1/2	TSRCU05	278100
3/4	TSRCU07	278101

Strain Relief Connector

3/4	SRCU07	278102
	c/w 4 Grommets - 3/4" solvent weld male end	

Strain Relief Connectors Grommet Dimensions

Grommet	from	to
	Ø = .240"	Ø = .315"
	Ø = .320"	Ø = .415"
	Ø = .420"	Ø = .515"
	Ø = .520"	Ø = .615"

Note: All four grommets and corresponding compression rings are supplied with TSRCU05, TSRCU07 & SRCU07.

BOXES - F SERIES

Size inches	Part Number	Cubic Inch Capacity	Product Code	L inches	W inches	D inches
Single Gang Boxes						
1/2	FSE05	17.5	078229	4.58	2.82	2.0
3/4	FSE07	17.5	078230	4.58	2.82	2.0
1/2	FSC05	17.0	078226	4.58	2.82	2.0
3/4	FSC07	17.0	078227	4.58	2.82	2.0
1/2	FSS05	17.0	078232	4.58	2.82	2.0
3/4	FSS07	17.0	078233	4.58	2.82	2.0
1/2	FSCC05	16.3	078235	4.65	2.85	2.0
3/4	FSCC07	16.3	078236	4.65	2.85	2.0

Single Gang Deep Boxes

1/2, 3/4, 1	FSCD050710	26.0	278051	4.58	2.82	2.76
1/2, 3/4, 1	FSED050710	26.8	278050	4.58	2.82	2.76
BLANK	FD	29.0	078215	4.54	2.79	2.91

F-Series Single Gang Deep Boxes for use with Self-taping, stainless steel screws

1/2, 3/4, 1	FDS101520ST	26.8	077847	4.58	2.82	2.76
1/2, 3/4, 1	FDC101520ST	26.0	077849	4.58	2.82	2.76

Screws are not included

Double Gang Boxes

1/2, 3/4, 1	FSE-2-050710-U	38.5	278082	4.62	4.62	2.5
1/2, 3/4, 1	FSS-2-050710-U	37.0	278087	4.62	4.62	2.5
1/2, 3/4, 1	FSC-2-050710-U	37.0	278083	4.62	4.62	2.5
1/2, 3/4, 1	FSCC-2-050710-U	35.0	278084	4.62	4.62	2.5
BLANK	FD-2-U	47.5	278038	4.75	4.75	3.0

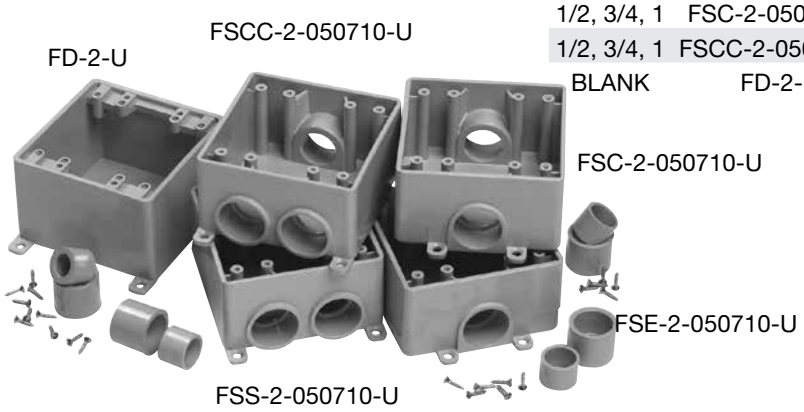

FSE-3-050710

FSS-3-050710

FD-3

Size inches	Part Number	Cubic Inch Capacity	Product Code	L inches	W inches	D inches
Triple Gang Boxes						
1/2, 3/4, 1	FSE-3-050710	56.0	278067	4.50	6.06	2.5
1/2, 3/4, 1	FSC-3-050710	54.0	278068	4.50	6.06	2.5
BLANK*	FD-3	56.0	278069	4.1	6.73	3.1

* Not UL Listed

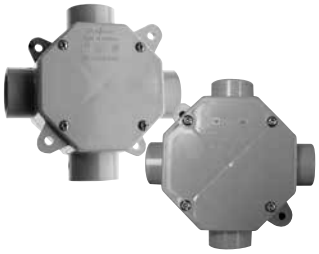

Size (in)	Hub Size (in)	Part Number	Product Code	L inches	D inches
Octagonal Boxes					
4 x 1 1/2	1/2 + 3/4	OB401505/07	078414	4	1.68
4 X 2 1/8	1	OB402010	078415	4	2.25

Octagonal Boxes are shipped complete with cover, gasket, 4 reducing bushings (3/4” x 1/2”), and 4 sealing caps to be installed from inside box to seal off unused entry hubs.

Size inches	Part Number	Product Code
Octagonal Box Extension Rings		
4 x 1 deep	XR20	077989
4 x 2 deep	XR35	077990

Note: Octagonal Boxes are not designed for supporting light fixtures.

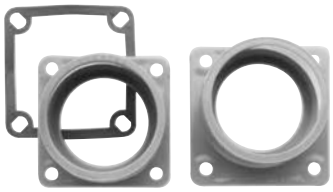

Meter Hubs

1-1/4	MHU25	077961
1-1/2	MHU30	077963
2	MHU35	077965
2-1/2	MHU40	077967
3	MHU45	077968

Size inches	Part Number	Product Code	OD inches
Threaded Round Boxes			
4 - 3/4” Threaded Hubs	LFB150C	077250	4.475
4 - 3/4” Threaded Hubs	LFB150T *	077251	4.475

*LFB150T complete with 1/2 threaded” hole in center of cover

COVER PLATES - F SERIES

Description	Part Number	Product Code
Single Gang Plates		
Duplex Receptacle	DRC15/10	078889
Toggle Switch	TSC15/10	078898
Single Receptacle	20RC15/10	078882
Single Receptacle	20-3RC15/10	078913
Single Receptacle	30-3RC15/10	078914
Blank c/w Gasket	FSKIT	078241

DRC15/10 TSC15/10 20RC15/10 20-3RC15/10 30-3RC15/10 FSKIT

Double Gang Plates		
Blank Cover c/w Gasket	BRC20-2-U	278085
Double Switch	TSC20-2-U	278088
Double Duplex Receptacle	DRC20-2-U	278086
Combo Switch Duplex Rec.	TSDC20-2-U	278089
Foam Gasket with Adhesive	GASKF20-2-U	172650

BRC20-2-U TSC20-2-U DRC20-2-U TSDC20-2-U GASK20-2-U

Triple Gang Plates		
Triple Receptacle	DRC20-3	278070
Combo Switch Receptacle	DSDR20-3	278071
Triple Switch	TSC20-3	278072
Combo Switch Receptacle	TSDC20-3	278073
Blank Cover c/w Gasket	BRC20-3	077748
Gasket for 3 Gang 'F' Boxes	GASK20-3	077749

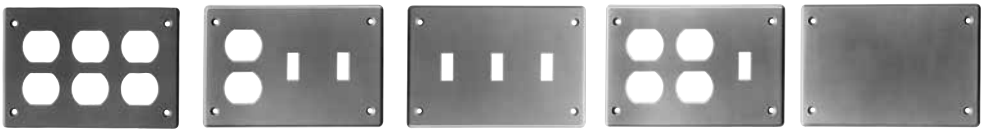

DRC20-3 DSDR20-3 TSC20-3 TSDC20-3 BRC20-3

WEATHERPROOF COVERS

Manufactured with stainless steel return-springs/clips and packaged with brass screws, Kraloy weatherproof covers provide a positive seal, even in cold temperatures.

VPT15/10

VSC15/10

WTG15/10

WDR15/10
RWDR15/10

WGF15/10
RWGF15/10

WTL15, WTL20,
WTL30

WTL50

WDRE15/10
RWDRE15/10

Description	Device Opening (in)	Part Number	Product Code
Single Gang Weatherproof Covers			
Plunger-style Switch Cover		VPT15/10	078899
Toggle Switch Cover		VSC15/10	078900
Grey Toggle Switch Cover		WTG15/10	078903
Grey Duplex Receptacle		WDR15/10	078901
White Duplex Receptacle		RWDR15/10	078843
Grey Ground Fault Receptacle		WGF15/10	078902
White Ground Fault Receptacle		RWGF15/10	078844
Single Receptacle Device 15 AMP	1.375	WTL15	078904
Single Receptacle Device 20 AMP	1.625	WTL20	078905
30 AMP Twist-Lock	1.722	WTL30	078906
50 AMP Twist-Lock	2.187	WTL50	078909
Grey Double Door Duplex Receptacle		WDRE15/10	078326
White Double Door Duplex Receptacle		RWDRE15/10	078383
Gasket for W Series Cover (except WDRE & RWDRE)		GASKW	077755
Gasket for WDRE & RWDRE Covers		GASKDD	072225

Gaskets are included with all weatherproof covers.

VSCU20-2-U

VSDRU20-2-U

VSRC20-2-U

VSGG20-2

VSDD20-2

Double Gang Weatherproof Covers		
Toggle Switch Cover	VSC20-2-U	278090
Combination Switch Cover & GFI Receptacle	VSRC20-2-U	278092
Combination Switch Cover & Duplex Receptacle	VSDR20-2-U	278091
Double Door GFCI Cover	VSGG20-2	078327
Double Door Duplex Cover	VSDD20-2	078335
Gasket for Double Gang (except VSGG20-2 & VSDD20-2)	GASKF20-2-U	172650
Gasket for VSGG20-2 and VSDD20-2 Double Gangs	GASKV20-2	072227

All covers are universal and will fit on most PVC and metal boxes.
Gaskets are included with all weatherproof covers.

STANDARD JUNCTION BOXES

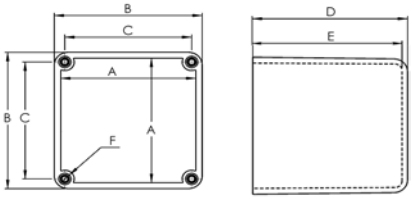

Size (in.)	Part Number	Part Number	A	B	C	D	E	F
					(inches)			
Junction Boxes								
4 x 4 x 2	JB442	078242	3.71	4.05	3.42	2.15	1.99	8-32
4 x 4 x 4	JB444	078243	3.65	4.00	3.43	4.17	4.02	8-32
4 x 4 x 6	JB446	078244	3.65	4.02	3.43	6.23	6.00	8-32
5 x 5 x 2	JB552	078245	4.66	5.00	4.50	2.00	1.85	8-32
6 x 6 x 4	JB664	078246	6.08	6.41	5.80	4.20	4.00	8-32
6 x 6 x 6	JB666	078247	6.02	6.38	5.80	6.00	6.21	8-32
8 x 8 x 4	JB884	078248	8.06	8.60	7.95	4.18	3.97	1/4-20
8 x 8 x 7	JB887	078249	8.10	8.60	7.95	7.24	7.00	1/4-20
12 x 12 x 4	JB12124	078250	11.93	12.48	11.84	4.26	4.00	1/4-20
12 x 12 x 6	JB12126	078251	11.97	12.36	11.80	6.25	5.99	1/4-20
12 x 12 x 8	JB12128	078252	11.90	12.50	11.84	8.24	7.96	1/4-20

External mounting feet are supplied with all sizes except JB442 and JB552.

Kraloy PVC Junction Boxes are:

NEMA 1, 2, 3, 4, 4X, 6P, 12, 13

UL listed for wet locations

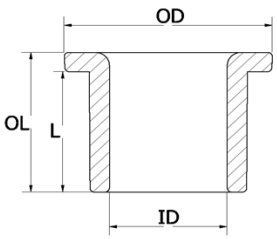

Size inches	Part Number	Product Code	ID inches	OD inches	L inches	OL inches
Junction Box Adapters						
1/2	JBA05	078276	0.62	1.20	0.81	0.95
3/4	JBA07	078277	0.79	1.40	0.87	1.01
1	JBA10	078278	1.00	1.58	0.89	1.06
1-1/4	JBA12	078279	1.35	1.98	1.12	1.30
1-1/2	JBA15	078280	1.59	2.37	1.10	1.33
2	JBA20	078281	2.05	2.85	1.25	1.54
2-1/2	JBA25	078282	2.45	3.34	1.68	1.99
3	JBA30	078283	3.05	3.10	1.77	2.11
3-1/2	JBA35	078284	3.54	4.50	2.09	2.41
4	JBA40	078285	4.02	5.03	1.99	2.30

KRALOY PVC ROUND FLOOR BOX

Installation is quick and simple with our nonmetallic floor box and covers, saving both time and money over similar metallic assemblies.

Kraloy's floor box and duplex receptacle covers are constructed from high impact, noncorroding and nonconducting PVC. The flush mount covers are available in custom colors and are shipped with a leveling ring. Metal cover adapter kits are also available, allowing you to adapt to metal floor plates. Our 6" deep floor box allows flexibility for various concrete floor pours, while our 4 3/4" width offers easy access and ample wire room. The box comes complete with 2 - 1" and 2 - 3/4" hub openings.

All boxes are shipped complete with reducer plugs (2 - 1 x 3/4, 3 - 3/4 x 1/2) for added versatility.

Nonmetallic Floor Box, Cover & Metal Cover Adapter

Description	Part Number	Product Code
Floor Box Base	FB	078876
(includes disposable protective cap & reducer plugs) suitable for slab-on-grade or below grade, and wood floor construction		
Floor Box Kit	FBKIT	078908
c/w Universal leveling ring adapter, disposable protective cap and reducer plugs		
Metal Cover Adapter Kit	AFMC	078875
(includes leveling ring, metal cover adapter ring & two shim gaskets for height adjustment)		
Universal Leveling Ring Adapter	LRA-U	078446
Floor Box Duplex Receptacle Cover (Nonmetallic) c/w leveling ring and blank cover & gasket. Accepts standard duplex receptacle (not included)		
Brown	FBDRCB	078877
Gold	FBDRCG	078878
Grey	FBDRCGr	078618
Light Almond	FBDRCA	078841
Tri-Service Universal Divider Kit	FBUDK	078993
(includes upper & lower dividers, riser tube & four grommets) Kit partitions the round PVC floor box to permit power, communication and/or data cabling in one location and within the same box		
Y Connector	FBYC	078928
use y connector to feed through (in/out) or to bring a parallel run of 3/4" conduit to the same hub		

Round Floor Box Stand

This simple yet innovative Round Floor Box Stand is equipped with several height brackets which accommodate the different rebar and post-tension cable heights and slab depths. When installed together, the Floor Box and Stand can be used in 5-1/2” to 10” slab depths.

Features:

- Four adjustable heights
- Easy to install
- Cost effective
- Raises entrance hubs to rebar height
- Minimizes footprint on concrete form
- Withstands tough job site conditions

The Round Floor Box easily snaps into the Stand on one of the four convenient height brackets at 2-1/2”, 3”, 3-1/2” and 4”. By raising the Floor Box off the concrete form, the footprint is minimized which reduces the amount of time the contractor spends finishing the concrete surface. In addition, the various Stand heights allow the ENT to enter the Box in a flat and straight path, resulting in less effort by the contractor when pulling in the electrical cable.

Part Number	Product Code
FBS-KIT	178269

Brass and Nickel Cover Plates

These cover plates help to protect enclosed power data and communications wiring from daily environmental floor conditions such as mopping (UL scrub water tested) and foot traffic (UL approved for cover loading).

The covers feature a light lacquer finish for extra strength and durability in high traffic areas and include a rubber gasket and aluminum backing plate to create a water-tight seal. The flush mount cover plates should be installed to the floor box using the LRA-U.

Nickel Cover Plates

DFL-2-N SSC-N DSC-N

Description	Part Number	Product Code
Duplex Receptacle Cover with Dual Flip Lid	DFL-2-N	178279
Duplex Receptacle Cover with Individual Screw Plug Openings	SSC-N	178278
Combination 2” x 1/2” Single Screw Plug Opening	DSC-N	178280

Brass Cover Plates

DFL-2 SSC DSC

Description	Part Number	Product Code
Duplex Receptacle Cover with Dual Flip Lid	DFL-2	178096
Duplex Receptacle Cover with Individual Screw Plug Openings	SSC	178093
Combination 2” x 1/2” Single Screw Plug Opening	DSC	178091
Combination 2” x 1/2” Single Screw Plug and 1/2” Datacomm Opening	DSC-P/C	178092

CEMENTS AND PRIMERS

Choosing the correct cement is a vital link in a thermoplastic piping system. Although cement is one of the most critical components of a piping system, it is most often overlooked. Cements are formulated to best meet specific needs –for example, general-purpose cement is thinner and less aggressive in bonding than heavy-duty industrial cement. Use Clear Conduit Solvent Cement Medium Bodied to create solid, waterproof joints when connecting electrical PVC conduit pipe. The cement is approved for use with rigid PVC conduit such as Kraloy's Rigid PVC conduit & fittings, Kwikon ENT and fittings, and Duct & fittings.

Size	Part Number	Product Code
Clear Regular Bodied Solvent Cement (Low VOC)		
1/2 Pint	CEMC05	078883
Pint	CEMC10	078884
Quart	CEMC20	078885
Gallon*	CEMC80	078887
Clear Medium Bodied Solvent Cement (Low VOC)		
Pint		078798
Quart		078799
Grey Medium Bodied Solvent Cement		
Pint	CEMG10	078083
Quart	CEMG20	078096
Cold Weather Solvent Cement		
Pint	CWC10	078503
Quart	CWC20	078886
ENT Solvent Cement (Low VOC)		
Quart	CCB100QT	078186
Clear Conduit Primer (Low VOC)		
Pint	PRMC10	078174
Quart	PRMC20	078175
Purple Primer (Low VOC)		
Quart	PRMP20	078054

All cements and primers come with applicator caps except were indicated with *

AVERAGE # OF JOINTS PER PINT OR QUART OF CEMENT

Nominal Pipe Size inches	# of Joints per Pint	# of Joints per Quart
1/2	350	700
3/4	200	400
1	150	300
1-1/4	110	220
1-1/2	80	160
2	45	90
2-1/2	40	80
3	35	70
3-1/2	30	60
4	24	48
5	10	20
6	8	16

Kraloy JBox

Technical Information 42

Kraloy JBox 44

Kraloy JBox with Hinged Cover 45

Performance Ratings 46

NEXT GENERATION JUNCTION BOX

KRALOY® JBox™

Introducing the Kraloy® JBox™, the Next Generation Junction Box. The original junction box is completely redesigned and features have been added to make this the easiest box to use. The patent pending integral gasket, non-metallic fasteners, molded mounting feet, embossed grid-lines and flat cover features have been engineered to provide a contractor-friendly junction box.

SHORT FORM SPECIFICATIONS

Junction boxes shall be acceptable for indoor and outdoor use and manufactured of PVC in a gray color analogous to Rigid PVC conduit and fittings. The junction box and its fasteners, hinges or components shall be entirely non-metallic. Boxes shall be NEMA rated 1, 2, 3R, 4, 4X, 6, 6P, 12, 13 and certified to bi-national standard UL50/50E - CSA No.94.1/94.2 by a Nationally Recognized Testing Laboratory (i.e. UL or CSA).

The cover/box seal shall be dual-molded so as to be a permanent part of the cover and the cover secured to the box using non-metallic quarter-turn “close by hand, tool assist to open” fasteners. To aid in the alignment and proper positioning of conduit connections the box/enclosure shall have embossed gridlines on the sidewalls. The mounting feet shall be a permanent molded feature of the box and not extend beyond the periphery of the box/enclosure. On boxes/enclosures of nominal size 8”x8” and larger, back-panel / DIN rail mounting and pad-lock provisions shall be incorporated into the product.

Acceptable manufacturer: Kraloy JBox Series

APPLICATIONS

- Corrosive Environments
- Waste-water treatment facilities
- Marine & car washes
- Agricultural
- Wash down

STANDARDS

NEMA Rated: 1, 2, 3R, 4, 4X, 6*, 6P*, 12, 13
* Applies only to 4” to 12” non-hinged covers

CSA Listed
CSA C22.2 No. 40, CSA C22.2 No. 85

UL Listed for wet locations
UL 50 / CSA C22.2 No. 94.1,
UL 50E / CSA C22.2 No. 94.2

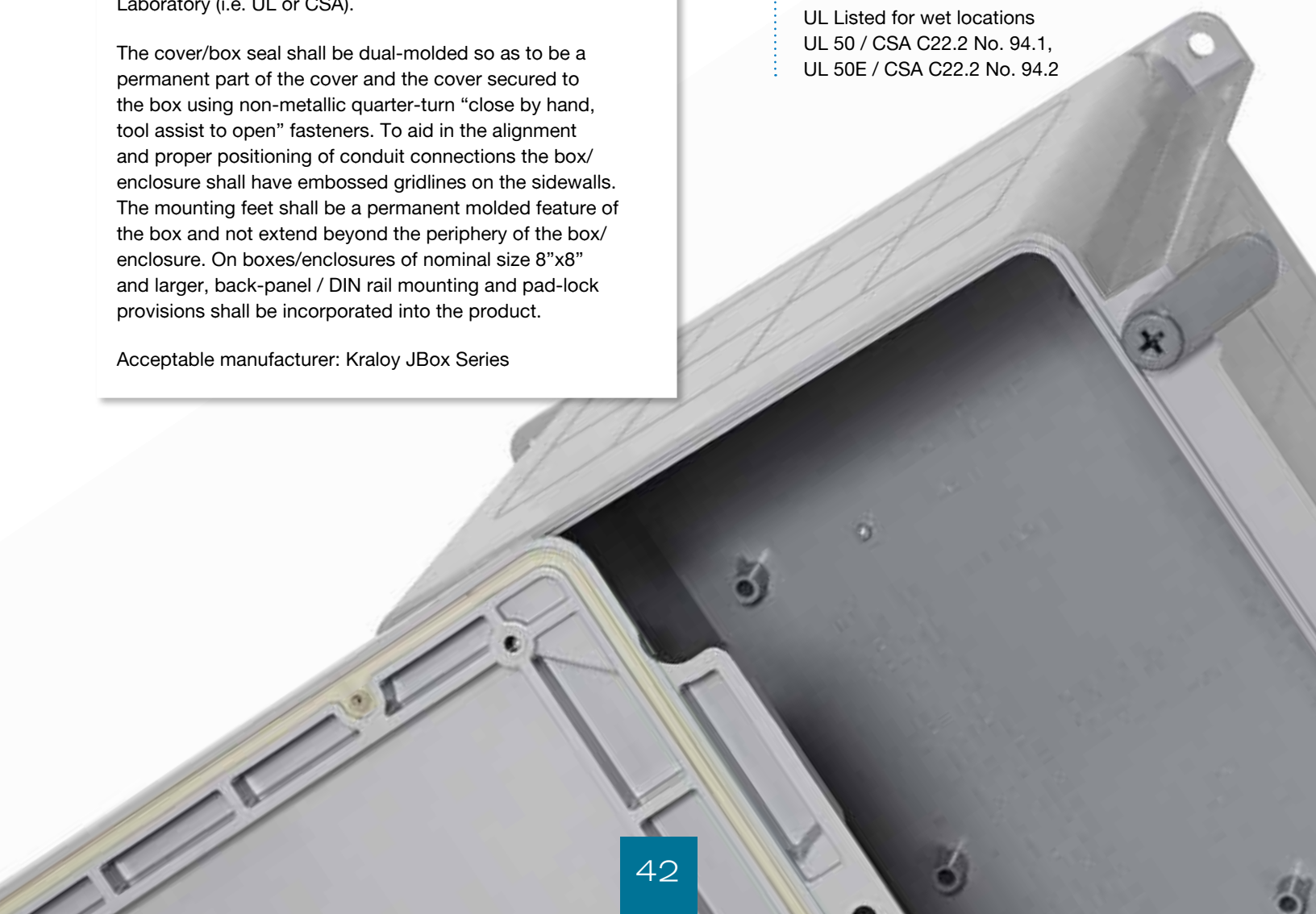

ADVANTAGES

1 HAND-CLOSE FASTENERS

- Close by hand – tool assist to open
- 100% non-metallic – corrosion resistant material
- No loose hardware for easy installation

2 SMOOTH FLAT COVER

- No ribs – offers a flat, smooth surface for mounting of devices or labels
- No engravings

3 LOCK-OUT OPTION

- Available on sizes 6” to 16”
- Use a tie-wrap, bolt or padlock for added security

4 LEAK-FREE INTEGRATED GASKET

- Injection molded and extruded gaskets permanently fixed to the cover – no installation required
- Proprietary gasket material creates a 6P rated enclosure (4” – 12”)
- Neoprene gasket material creates a 4X rated enclosure (14” – 16”)

5 MOLDED MOUNTING FEET

- Molded – no loose parts to assemble
- Located on corners out of the way of conduit connections
- Flush with the back of the box for close surface mounting
- Integrated design of mounting feet offers improved strength

6 BUILT-IN GRIDLINES FOR DRILLING

- Easy reference for drilling knockouts
- Makes conduit alignment a snap
- Indicates a “drill zone”

7 POLE MOUNTING KIT

- Installs on round, square & octagonal poles up to 15” diameter
- Works with wood, concrete, steel and composite poles
- Supplied as a complete kit in galvanized or stainless steel

8 BACK PANEL

- Designed to fit sizes 6” and 16”
- Made of 14 gauge carbon steel
- White epoxy powder-coated finish
- Easy to cut and drill to mount devices

KRALOY JBOX

Size inches	Part Number	Product Code	L1	W1	L2	W2	H	M1	M2	G1	G2	J1	J2	D	K
									inches						
Kraloy JBox 4” to 6”															
4x4x2	JBX442	278300	4.97	3.93	3.48	3.48	2.90	4.48	3.44	2.41	1.09	1.72	1.09	0.51	0.24
4x4x4	JBX444	278301	4.90	3.86	3.48	3.48	4.89	4.41	3.37	2.22	2.97	1.59	2.97	0.59	0.24
5x5x2	JBX552	278302	5.97	4.93	4.55	4.55	2.90	5.48	4.44	3.41	1.09	2.69	1.09	0.51	0.24
6x3x4	JBX634	278303	3.90	5.86	2.48	5.48	4.89	3.41	5.37	1.22	2.72	3.42	2.72	0.59	0.28
6x6x4	JBX664	278304	7.58	7.58	5.86	7.20	4.90	6.90	6.90	4.47	2.47	4.47	2.47	0.59	0.28
6x6x6	JBX666	278305	7.51	7.51	5.79	7.13	6.90	6.83	6.83	4.22	4.47	4.22	4.47	0.72	0.28

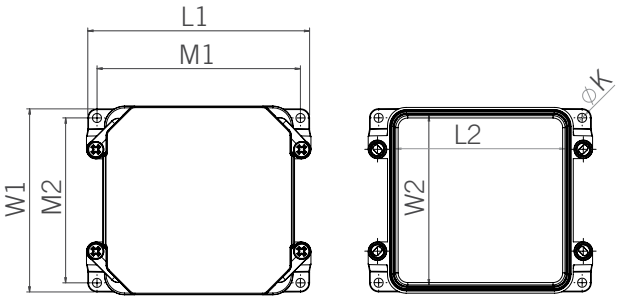

JBX8442 - JBX666

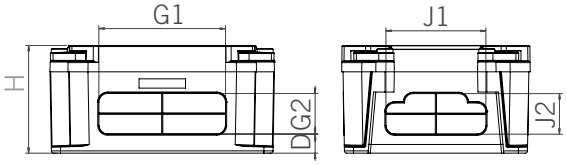

Size inches	Part Number	Product Code	L1	W1	L2	W2	H	M1	M2	G1	G2	N1	N2	P1	P2	D	K
										inches							
Kraloy JBox 8” to 16”																	
8x8x4	JBX884	278306	9.58	9.58	7.86	9.20	4.90	8.90	8.90	6.47	1.97	8.25	6.26	3.94	3.13	0.59	0.28
8x8x7	JBX887	278307	9.47	9.47	7.76	9.10	7.90	8.80	8.80	6.22	4.65	8.25	6.26	3.94	3.13	0.75	0.28
12x12x4	JBX12124	278308	13.58	12.24	11.74	11.74	4.90	12.90	11.56	9.28	2.03	10.26	10.25	3.94	3.13	0.56	0.28
12x12x6	JBX12126	278309	13.51	12.17	11.74	11.74	6.90	12.83	11.49	9.03	3.78	10.26	10.25	3.94	3.13	0.67	0.28
12x12x8	JBX12128	278310	13.44	12.10	11.74	11.74	8.90	12.76	11.42	8.81	5.64	10.26	10.25	3.94	3.13	0.76	0.28
14x14x8	JBX14148	278311	15.72	14.39	13.80	13.80	9.1	15.1	13.70	11.05	5.69	12.25	10.26	3.94	3.16	0.83	0.33
14x14x10	JBX141410	278312	15.66	14.32	13.80	13.80	11.1	15.0	13.64	11.05	7.55	12.25	10.26	3.94	3.16	0.83	0.33
16x16x10	JBX161610	278313	17.64	16.30	15.71	15.71	11.1	17.0	15.60	12.55	7.55	14.25	12.26	4.71	4.09	0.83	0.33

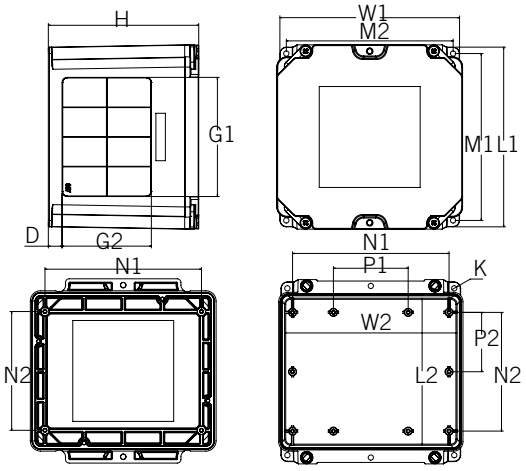

JBX884 - JBX887

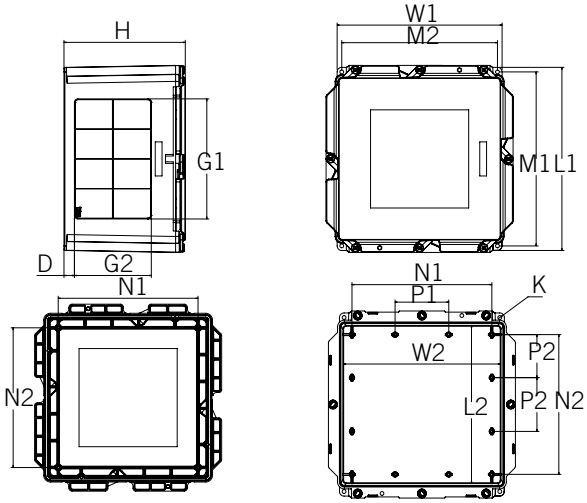

JBX12124 - JBX161610

KRALOY JBOX WITH HINGED COVER

The Hinged Covers open up to 214° and are removable for complete and easy access to control devices and instrumentation.

The Kraloy JBox Hinged Cover is NEMA 3R and 4X rated, ideally suited for indoor and outdoor industrial, MRO and OEM applications, and in wash-down environments. It is 100% non-metallic and includes all the features that users have come to appreciate in the Kraloy JBox.

Kraloy JBox w Hinged Cover 8” to 16”

Size inches	Part Number	Product Code	L1	W1	L2	W2	H	M1	M2	G1	G2	N1	N2	P1	P2	D	K
										inches							
8x8x4	JBXH884	278400	9.58	9.58	7.86	9.2	4.9	8.9	8.9	6.47	1.97	8.25	6.26	3.94	3.13	0.59	0.28
8x8x7	JBXH887	278401	9.47	9.47	7.86	9.2	7.9	8.9	8.9	6.22	4.65	8.25	6.26	3.94	3.13	0.75	0.28
12x10x6	JBXH12106	278402	11.51	12.17	9.67	11.67	6.9	10.8	11.49	8.03	3.78	10.25	8.26	3.94	2.16	0.67	0.28
12x12x4	JBXH12124	278403	13.58	12.24	11.74	11.74	4.9	12.9	11.56	9.28	2.03	10.26	10.25	3.94	3.13	0.56	0.28
12x12x6	JBXH12126	278404	13.51	12.17	11.74	11.74	6.9	12.83	11.49	9.03	3.78	10.26	10.25	3.94	3.13	0.67	0.28
12x12x8	JBXH12128	278405	13.44	12.10	11.74	11.74	8.9	12.76	11.42	8.81	5.64	10.26	10.25	3.94	3.13	0.76	0.28
14x14x8	JBXH14148	278406	15.72	14.39	13.80	13.80	9.1	15.10	13.70	11.05	5.69	12.25	10.26	3.94	3.16	0.83	0.33
14x14x10	JBXH141410	278407	15.66	14.32	13.80	13.80	11.1	14.98	13.64	11.05	7.55	12.25	10.26	3.94	3.16	0.83	0.33
16x16x10	JBXH161610	278408	17.64	16.30	15.71	15.71	11.1	17.0	15.60	12.55	7.55	14.25	12.26	4.71	4.09	0.83	0.33

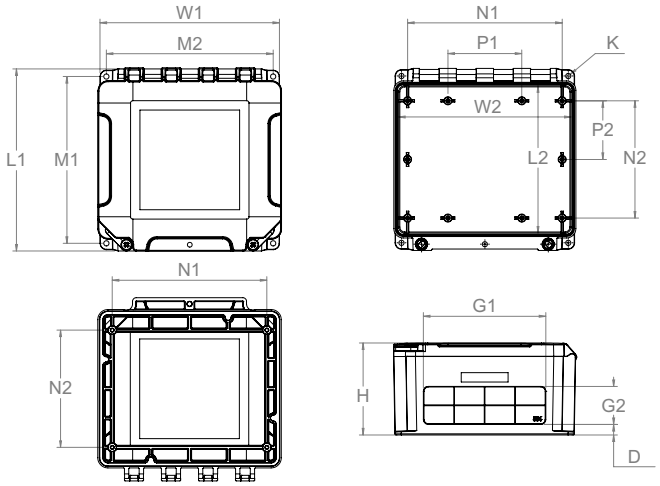

JBXH884 - JBXH887

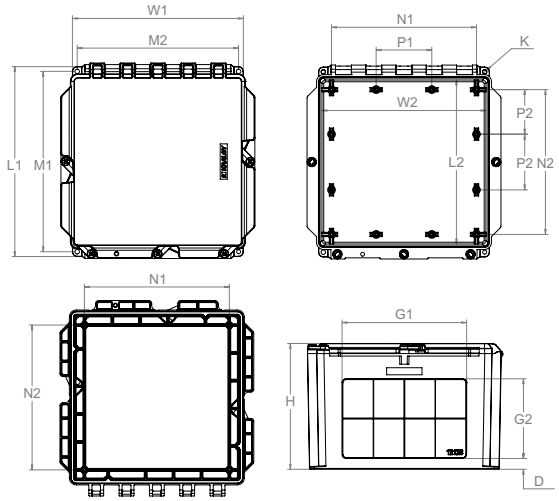

JBXH12106 - JBXH161610

Kraloy JBox Pole Mounting Kit

- Available in either galvanized or stainless steel
- Supplied as complete kits (sold separately)
- Works with wood, concrete, steel and composite poles
- Installs on round, square & octagonal poles up to 15”

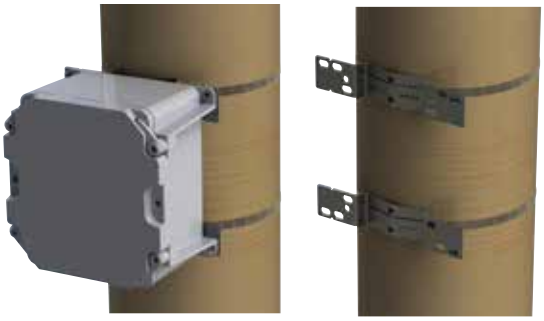

Part Number	Product Code	Fits JBox
PMK4-12	077940	4” - 12”
PMK4-12SS*	077946	4” - 12”
PMK14-16SS*	277086	14” - 16”

* Stainless Steel

Kraloy JBox Back Panels

- Made of 14 gauge carbon steel
- White epoxy powder-coated finish
- Easy to cut and drill to mount devices

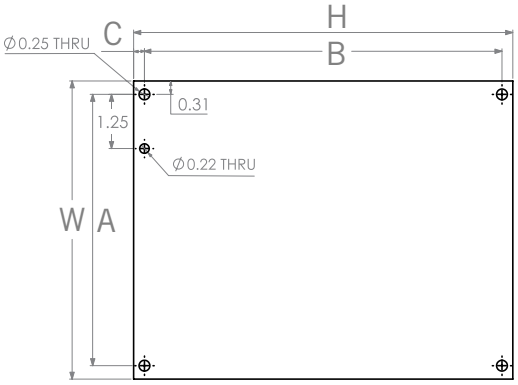

Size inches	Part Number	Product Code	W	H	A	B	C
			inches				
6x6	BP66CSW	077864	4.88	6.75	4.26	6.25	0.25
8x8	BP88CSW	077861	6.88	8.75	6.26	8.25	0.25
12x10	BP1210CSW	077862	8.88	10.75	8.26	10.25	0.25
12x12	BP1212CSW	077865	10.88	10.75	10.26	10.25	0.25
14x14	BP1414CSW	077867	10.88	12.75	10.26	12.25	0.25
16x16	BP1616CSW	077868	12.88	14.75	12.26	14.25	0.25

Performance Ratings

MAXIMUM TEMPERATURE RANGE: Maximum ambient temperatures to 122ºF (50°C) as per the NEC

RECOMMENDED OPERATING TEMPERATURE: -40°F to 122°F (-40°C to 50°C)

UV AND WATER EXPOSURE RATING: UL 746C approved for exposure to UV and water

FLAME & SMOKE RATING: UL 94V-0 (UL94 Vertical Flame Test)

NEMA ENCLOSURE RATINGS: The Kraloy JBox is NEMA Rated 1, 2, 3R, 4, 4X, 6, 6P, 12, 13

INDUSTRIAL CONTROL PANELS UL 508A: Suitable to be used as an enclosure per section 18 of UL 508A

CONDUCTORS: Suitable for use with 90ºC Rated Conductors

VERTICAL-LOK SPACERS

Technical Information 48

Intermediate Vertical-Lok Spacers 49

Base Vertical-Lok Spacers 49

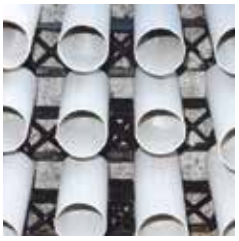
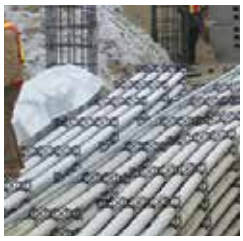

VERTICAL-LOK SPACERS

Kraloy's interlocking spacers provide uniform separation between the rows and columns of conduits and when assembled with conduit, create a stable structure for the concrete. Spacers connect quickly and easily by sliding together horizontally and snapping together vertically and provide true customization for any configuration of duct bank.

Kraloy conduit interlocking spacers are available in a variety of spacing dimensions for all conduit sizes. Our most popular sizes are offered with unique rebar holder slots for quick reinforcing bar installation and the bases have support holes for securing the base spacers to the trench bottom.

Kraloy conduit spacers manufactured with the rebar holder slots can accommodate a maximum rebar diameter of 5/8" for the 2" conduit size and 7/8" for all other conduit size spacers. All conduit spacers provide a 3" clearance from the trench base to the bottom of the first conduit.

APPLICATIONS

- Residential (low or high rise)
- Commercial (low or high rise)
- Institutional (Prisons, Schools, Universities)
- Hospitals and Nursing Homes
- Stadiums and Arenas

ADVANTAGES

1 INNOVATIVE DESIGN

The ingenious design adapts to the inherent irregularities and contours of a trench with a wide support surface to ensure even load distribution.

2 MAXIMUM FLEXIBILITY

Different sized spacers can be easily grouped to create the required width of duct bank.

3 TOUGH AND RESILIENT

Made of resilient, high-density polyethylene, our spacers easily withstand inclement weather and severe conditions normally found on a construction site. Losses caused by breakage are virtually eliminated. Kraloy's spacers are resilient at extremely low temperatures. Tough and flexible, these spacers are immune to corrosion, rust, mildew and humidity.

4 MOLDED RE-BAR INNOVATION

These provide better alignment and more uniform distribution of re-bar in a duct bank, making duct bank installation even faster and easier.

5 INTEGRAL HOLES

The integral holes offer base spacer fastening and stabilization.

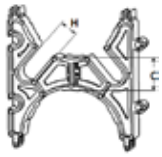

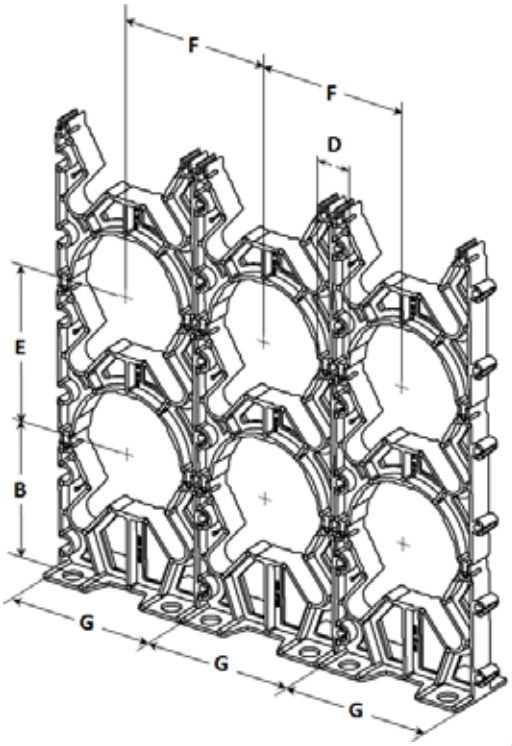

Dimension (inches)	Part Number	Product Code	C	D	E (inches)	F	G	H
Intermediate Vertical-Lok Spacers								
2 x 1-1/2	IS3530	029550	1.52	1.50	3.95	3.95	3.94	0.63
2 x 2	IS3535	029551	2.03	2.06	4.48	4.48	4.47	0.63
2 x 3	IS3545	029552	3.00	3.03	5.45	5.45	5.44	0.63
* 3 x 1-1/2	IS4530	029582	1.50	1.45	5.15	5.12	5.12	0.88
3 x 2	IS4535	029554	2.00	1.88	5.64	5.63	5.63	0.88
3 x 3	IS4545	029555	3.00	2.88	6.66	6.63	6.63	0.88
* 4 x 1	IS5520	029583	1.00	1.03	5.66	5.63	5.63	0.88
4 x 1-1/2	IS5530	029557	1.50	1.39	6.13	6.14	6.13	0.88
4 x 2	IS5535	029558	2.00	1.88	6.64	6.63	6.63	0.88
4 x 3	IS5545	029559	3.00	2.90	7.64	7.64	7.63	0.88
* 5 x 1-1/2	IS6030	029584	1.68	1.69	7.37	7.37	7.37	0.88
5 x 2	IS6035	029561	2.25	2.15	7.89	7.89	7.88	0.88
5 x 3	IS6045	029562	3.06	2.96	8.70	8.70	8.69	0.88
6 x 1-1/2	IS6530	029563	1.50	1.38	8.24	8.22	8.21	0.88
6 x 2	IS6535	029564	2.00	1.89	8.74	8.73	8.72	0.88
6 x 3	IS6545	029565	3.00	2.90	9.77	9.77	9.75	0.88
* 8 x 2	IS8035	029294	2.06	2.00	10.58	10.80	10.80	*

* Do not have rebar slots or base holes

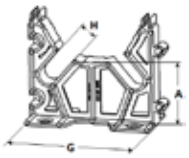

Dimension (inches)	Part Number	Product Code	Dimensions (inches) A	B	H	G
Base Vertical-Lok Spacers						
2 x 1-1/2	BS3530	029566	3.04	4.25	0.63	3.94
2 x 2	BS3535	029567	3.04	4.25	0.63	4.47
2 x 3	BS3545	029568	3.04	4.25	0.63	5.44
* 3 x 1-1/2	BS4530	029585	3.00	5.84	0.88	5.12
3 x 2	BS4535	029570	2.97	4.78	0.88	5.63
3 x 3	BS4545	029571	3.00	4.81	0.88	6.63
* 4 x 1	BS5520	029586	3.00	5.32	0.88	5.63
4 x 1-1/2	BS5530	029573	3.00	5.31	0.88	6.13
4 x 2	BS5535	029574	3.06	5.38	0.88	6.63
4 x 3	BS5545	029575	3.06	5.38	0.88	7.63
* 5 x 1-1/2	BS6030	029587	3.00	5.84	0.88	7.37
5 x 2	BS6035	029577	3.13	5.94	0.88	7.88
5 x 3	BS6045	029578	3.19	6.00	0.88	8.69
6 x 1-1/2	BS6530	029579	3.02	6.38	0.88	8.21
6 x 2	BS6535	029580	3.02	6.38	0.88	8.72
6 x 3	BS6545	029581	3.00	6.38	0.88	9.75
* 8 x 2	BS8035	029293	3.00	7.25	*	10.80

* Do not have rebar slots or base holes

Conduit **REPAIR QUICK & EASY!**

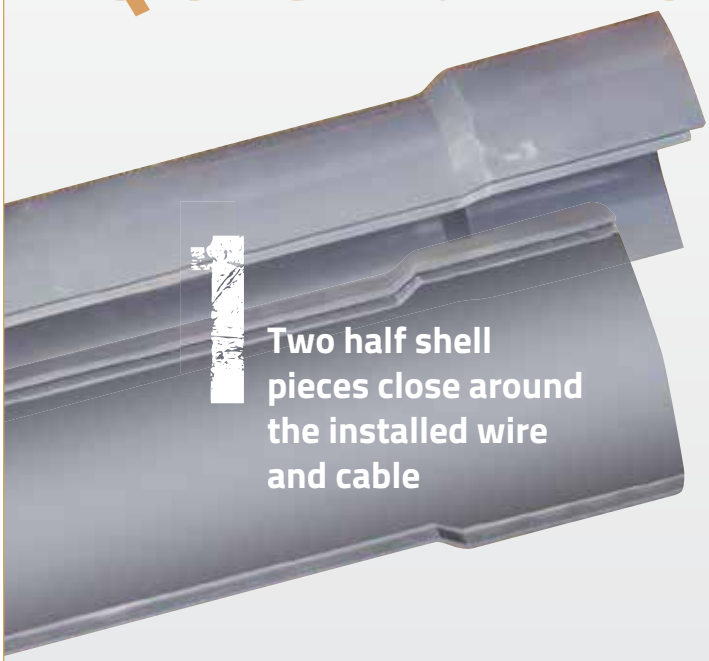

1 Two half shell pieces close around the installed wire and cable

2 Interlocking joints provide water-tight seal

3 Standard PVC solvent cement quickly connects the EPR kit, restoring the conduit to its original form

FEATURES & BENEFITS

- **Restores structural integrity of conduit system**
- **Cost savings with fast and easy installation**
- **Compatibility with existing installed PVC conduit**

EPR CONDUIT REPAIR KIT

Technical Information 52

Repair Steps 53

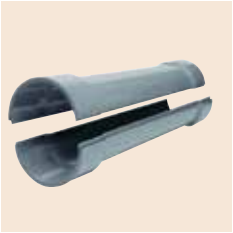

EPR CONDUIT REPAIR KIT

These clever and innovative conduit repair kits from Kraloy are the first total repair systems for broken and damaged PVC conduit. They offer fast and easy repairs for damaged conduit caused by actions such as earth excavation, horizontal and core drilling.

With unique interlocking joints, the EPR Kits' two half shell bell by bell pieces simply close around the installed wire and cable. Using standard PVC solvent cement, EPR Kits are quickly and easily assembled and connected, restoring the conduit to its original form. And, unlike other conduit repair systems, EPR Kits are capable of repairing various lengths and types of pipe quickly and accurately, saving you time and money.

ADVANTAGES

1. RESTORES STRUCTURAL INTEGRITY OF CONDUIT SYSTEM
2. COST SAVINGS WITH FAST AND EASY INSTALLATION
3. COMPATIBILITY - Inside diameter of bell equals outside diameter of pipe to create a bell and spigot connection
4. SPECIAL INTERLOCKING JOINTS
5. PROVIDE WATER-TIGHT SEAL
6. PACKAGING INCLUDES EASY TO FOLLOW INSTRUCTION SHEET
7. IDEAL FOR THE REPAIR OF RIGID PVC CONDUIT IN ELECTRICAL, TELECOMMUNICATION, UTILITY AND CATV APPLICATIONS

APPLICATIONS

- Utilities
- Cable
- Communications
- Residential
- Airports
- Subways
- Bridges & tunnels
- Water treatment plants
- Sewage treatment plants
- Pulp & paper industries
- Street & highway lighting
- Food processing plants
- Agricultural, dairy, hogs, cattle, chicken, etc.
- Parking garages
- Car washes
- Fish plants
- Mines
- Marinas
- Steel mills

REPAIRS CONDUIT AS EASY AS 1-2-3

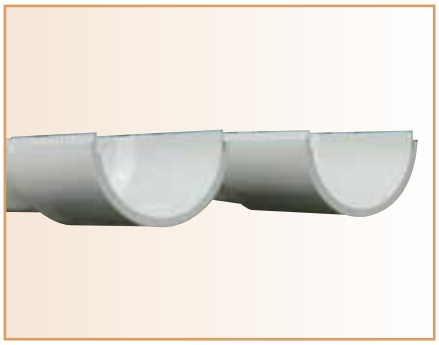

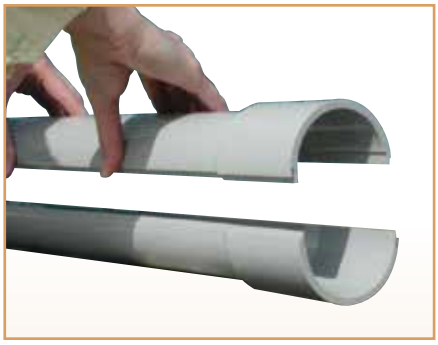

EPR KIT FOR CONDUIT REPAIR

Size (in)	Part Number	Product Code	Length (in)
1-1/4	EPR25	077982	24
1-1/2	EPR30	077981	24
2	EPR35	077980	24
2-1/2	EPR40	077960	24
3	EPR45	077958	24
4	EPR55	077957	24
5	EPR60	077956	24
6	EPR65	077955	24

SAVE Time & Money with Kwikon ENT & Fittings

An ENT system you can count on!

In 1986 we made in-slab electrical raceways faster to install by introducing the industry's first true, integrated ENT system – long lengths of flexible tubing that reduce the number of couplings needed. Kwikon ENT and fittings are designed to work together and provide the most robust concrete-tight ENT system on the market.

- Labor saving design compared to traditional EMT
- Six locking tabs for unbreakable connections
- Strong and flexible ENT tubing
- Boxes are installation ready and concrete-tight
- Form stubbies eliminate the need to drill to the deck

Kwikon Slab Boxes... Installation Made Easy

- Corner mounting tabs to guide nails inside the trim area
- Clear Vue vacuum formed, removable covers allow markings to be seen and prevent slurry or stucco from entering the box
- Ready to Install – no assembly required

Kwikon

Technical Information 56

Kwikon ENT 58

Kwikon Fittings 59

Kwikon Slab Boxes 61

Accessories 63

KWIKON®

Noncorroding and nonconducting Kwikon® Electrical Nonmetallic Tubing (ENT) fittings, slab boxes and accessories are engineered for the rugged day-to-day challenges of the construction industry - whether encased in concrete, concealed in walls or ceilings.

Kwikon ENT's corrugated construction allows it to be bent easily by hand. No special bending equipment is required. And our patented Kwikon couplings and connectors, with their unique 360º locking tabs, provide for snap-on, lock-in installation that exceeds UL requirements for conduit pullout.

Add our innovative form stubbys and Kwikon concrete-tight slab boxes, (available with or without integral 1⁄2", 3⁄4" or 1" molded hub connectors) and you've got a total integrated system that saves you time and money on the job. Available in 1⁄2" to 2-1/2" sizes, Kwikon ENT is FT-4 rated for use in non-combustible construction.

ADVANTAGES

1 CONCRETE-TIGHT

Every contractor's worst nightmare is a product that doesn't work or hold up in poured concrete; the costs of replacement and repair can be tremendous. Kwikon ENT and fittings are concrete-tight, requiring no solvent welding or tape around the connections, or paper stuffed inside.

2 PULL RESISTANT

Once a length of Kwikon tubing is connected to a coupling or connector, it stays connected, thanks to our unique six locking tab design. With a pull-out resistance of up to 175 lbs., our patented snap-on, lock-in system provides a seal that easily meets CSA requirements for conduit pullout.

3 FIRE RESISTANT

Kwikon ENT tubing, fittings and slab boxes are approved for use in noncombustible 2 hour and 4 hour fire-rated floor/ceiling assemblies.

4 IMPACT RESISTANT

Kwikon ENT is made of impact resistant PVC, so it won't break or crack if an object is dropped on it or someone steps on it.

5 STRONG FITTINGS

Kwikon's strong, solid fittings meet all UL and CSA requirements.

6 FLEXIBLE

Flexible enough to be bent by hand, Kwikon ENT is tough enough to withstand crushing and breaking.

APPLICATIONS

- Residential (low or high rise)
- Commercial (low or high rise)
- Institutional (Prisons, Schools, Universities)
- Hospitals and Nursing Homes
- Stadiums and Arenas

STANDARDS

CSA Standards C22.2 No. 227.1,
C22.2 No. 85 NEMA TC-13
UL 514B, UL 514C, UL 1653

STORAGE & HANDLING

- NOT to be installed, stored, or handled in cold temperatures below -20ºC (-4ºF)
- NOT to be stored outside

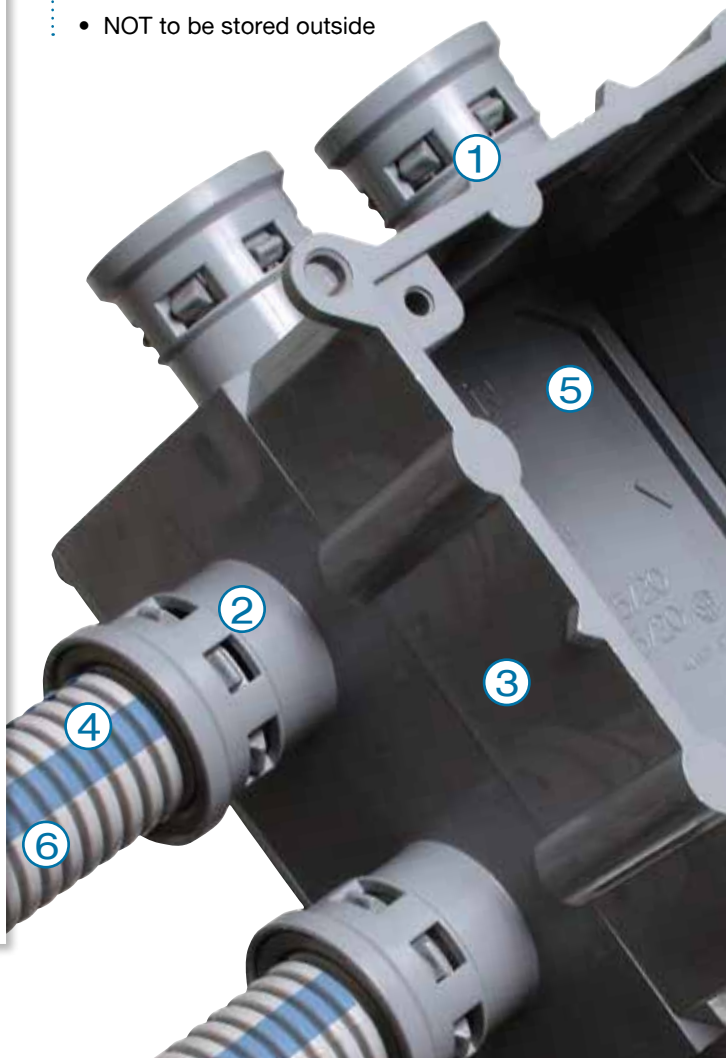

SHORT FORM SPECIFICATIONS

1.1 REFERENCES

A. Standards referred to in this section are:
   1. UL 1653 Electrical Nonmetallic Tubing
   2. NEMA TC-13 Electrical Nonmetallic Tubing

PRODUCTS

2.1 MANUFACTURERS

A. Acceptable manufacturers are listed below
   1. Electrical Nonmetallic Tubing: a. Kwikon by Kraloy
   2. Electrical Nonmetallic Tubing Fittings: a. Kwikon by Kraloy
   3. Electrical Nonmetallic Tubing Boxes: a. Kwikon by Kraloy

B. All ENT tubing, ENT fittings, ENT boxes and accessories shall be manufactured by the same company so as to form a complete ENT system.

C. ENT systems shall be approved for use in fire resistance rated concrete floor-ceiling assemblies with fire resistance ratings up to 4 hours.

2.2 RACEWAYS

A. ENT raceway shall be color coded to indicate the wiring system. Blue stripe for power, red stripe for fire alarm/emergency systems and yellow stripe for data/communications.

B. ENT raceway shall be listed to UL 1653 and manufactured in accordance with NEMA TC-13.

2.3 FITTINGS

A. ENT Fittings shall be manufactured of high-impact PVC

B. ENT Fittings shall meet the following requirements:
   1. Six locking tabs located every 60º providing 360º contact.
   2. Locking tabs shall provide a conduit pullout of a minimum 175 ft-lb force.
   3. Concrete tight without the need for taping.
   4. When transitioning to EMT conduit, the transition fitting shall have six locking tabs for ENT connection and set-screw connection for EMT.

2.4 BOXES

A. ENT boxes shall be manufactured of high-impact PVC

B. ENT Slab Box and Wall Box requirements:
   1. Slab Boxes shall be approved for the purpose and concrete-tight.
   2. Slab Boxes shall have eight (8) integrally molded ENT hub connectors with six locking tabs for ENT raceway connection.

3.1 INSTALLATION

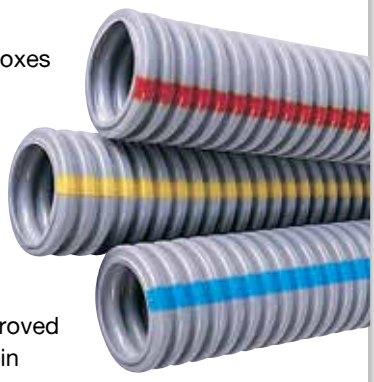

A. ENT raceways, fittings, boxes and accessories shall be installed in accordance with Article 362 of the 2008 National Electrical Code.

B. Where ENT penetrates a fire-rated wall, floor or ceiling assembly, an approved firestop system as listed in Underwriters Laboratories Building Materials Directory or other nationally recognized testing laboratory shall be used.

C. Not permitted for use where subject to ambient temperatures in excess of 122ºF (50ºC)

INSTALLING IS THIS EASY

1. UNROLL KWIKON TO DESIRED LENGTH

Available in convenient coil and reel lengths up to 1,500 ft., Kwikon gives you the flexibility to measure out exactly the amount of tubing you need. Kwikon requires fewer couplings for long spans than metal conduit. It's recommended ENT be securely fastened at 2 – 3 ft. intervals.

2. CUT KWIKON WITH AN ENT CUTTER

For straight cuts every time use the Kwikon scissor-style cutting tool. However, no special tools or cutting equipment are necessary. Kwikon can even be cut with a standard utility knife.

3. MAKE BENDS AND TURNS BY HAND

Unlike metal which has to be cut to fit tight spaces, Kwikon can be bent, turned and manipulated by hand to wind around irregular curves and corners. When bending, ensure the radius of the curve is at least six times the diameter of the tubing.

4. SIMPLY SNAP CONNECTIONS TOGETHER

With no special tools or equipment needed, Kwikon's unique snap-on fittings quickly and easily join or terminate Kwikon ENT and provide a concrete-tight connection.

5. PULL CABLE THROUGH KWIKON

Kwikon's interior corrugated surface significantly reduces the amount of friction when pulling cables through long runs, even in runs with 90° bends. With Kwikon, you can pull longer runs of cable without worrying about damage.

KWIKON ENT

Kwikon ENT Coils – Blue Stripe

Size inches	ID inches	OD inches	Length feet	Product Code
1/2	0.574	0.840	200	012031
3/4	0.778	1.050	100	012040
1	1.000	1.315	100	012041
1-1/4	1.340	1.660	500	012046
1-1/2	1.610	1.900	300	012032
2	2.020	2.375	225	012043

Kwikon ENT Reels – Blue Stripe

1/2	0.574	0.840	1500	012002
3/4	0.778	1.050	1000	012011
1	1.000	1.315	750	012021
1-1/4	1.345	1.660	1000	012047
1-1/2	1.610	1.900	750	012033
2	2.020	2.375	500	012044
2-1/2	2.469	2.866	325	012049

Kwikon ENT 10' Sticks – Blue Stripe

Size inches	Length feet	Product Code	Crate Size
1/2	10	012001	3600
3/4	10	012010	2200
1	10	012034	1800

Kwikon ENT Reels – Color Coded

Size inches	Length feet	Product Code Red	Product Code Yellow
1/2	1500	012305	012335
3/4	1000	012307	012337
1	750	012310	012340

Note: 1-1/4", 1-1/2", 2" red and yellow stripe ENT is available by special order.

STORAGE OF KWIKON ENT TUBING

Manufacturer recommends that ENT tubing should not be stored outdoors where subjected to direct sunlight without protective covering, i.e. packaging or tarps.

KWIKON FITTINGS

Kwikon Couplings

Size inches	Part Number	Product Code
1/2	KC10	089000
3/4	KC15	089001
1	KC20	089002
1-1/4	KC25	189670
1-1/2	KC30	189671
2	KC35	189672
2-1/2	KC40	089075

Kwikon Snap-in Connectors

1/2	KTS10	089146
3/4	KTS15	089147
1	KTS20	089148

Kwikon Connectors*

1/2	KTA10	089006
3/4	KTA15	089007
1	KTA20	089008
1-1/4	KTA25	189680
1-1/2	KTA30	189681
2	KTA35	189682
2-1/2	KTA40	089076

*KTA connectors are supplied with locknuts.

Kwikon Transition Couplings

1/2	KTC10	089012
3/4	KTC15	089013
1	KTC20	089014

KWIKON ENT FORM STUBBIES create conduit stub-downs in concrete without needing to drill holes in the plywood form. Available in the original stubby design, the angled version and the Multi-Link, Kwikon form stubbies also protect the ENT from potential damage during the removal of wood forms.

Kwikon ENT Form Stubbies

Size inches	Part Number	Product Code
1/2	KSTB-10	089330
3/4	KSTB-15	089331
1	KSTB-20	089332
1-1/4	KSTB-25	089333

The KWIKON ENT ANGLED FORM STUBBY gives you the advantage of positioning the ENT at a lower profile within the slab.

Kwikon ENT Angled Form Stubbies

Size inches	Part Number	Product Code
1/2	KASTB-10	089233
3/4	KASTB-15	089234
1	KASTB-20	089235
1-1/4	KASTB-25	089236
1-1/2	KASTB-30	089238
2	KASTB-35	089239
2-1/2	KASTB-40	089240

The KWIKON ENT MULTI-LINK FORM STUBBY features a snap-together design which enables them to be configured in a variety of tightly grouped formations. It also features a thin removable film over the drop opening.

Kwikon ENT Multi-Link Form Stubbies

Size inches	Part Number	Product Code
1/2	MSTB-10	089031
3/4	MSTB-15	089026
1	MSTB-20	089025

KWIKON FITTINGS

KWIKON STUB DOWN FITTINGS are designed for direct connection to ENT on the horizontal. The flanged base offers a NPSC threaded hub connection on the vertical (at the exit point of the slab) allowing for the direct transition to other raceway products or to ENT connection.

Either way, our Kwikon ENT connection creates a stub down of ENT without penetrating the form.

Designed to offer the optimal balance of bend radius and overall height in the slab, these fittings provide a bend radius of 2-1/2” while standing less than 3-3/8” tall.

	Size inches	Part Number	Product Code
Kwikon (KT90) Stub Down Fittings (Kwikon x Threaded)			
	1/2	KT90-10	089060
	3/4	KT90-15	089059
	1	KT90-20	089058
Kwikon (KK90) Stub Down Fittings (Kwikon x Kwikon)			
	1/2	KK90-10	089055
	3/4	KK90-15	089056
	1	KK90-20	089057

The ENT SUPPORT UNIT (ESU) raises the tubing or conduit up off the concrete form during the concrete pour maintaining a level raceway and allows for maximum aggregate flow and concrete consolidation.

Easy to use, the ESU snaps around any size of ENT. It is perfect for use in high rise buildings constructed with post-tensioned (PT) concrete slabs.

FEATURES

- One size fits all 1/2” - 2”
- Saves time and labor
- Easy locking mechanism
- Securable to the concrete form
- Minimal footprint reduces amount of surface contact

	Part Number	Product Code
ENT support unit (ESU)		
	ESU-10-35	089149

KWIKON SLAB BOXES

STANDARD SLAB BOXES

- Concrete-tight
- Corner and traditional mounting tabs offer contractors two options when installing to the slab deck
- Angled design guides the nail into position within the trim cover area
- All molded connectors have 360° locking tabs that exceed UL and CSA requirements for pull-out.
- Manufactured from high-impact PVC.
- Nonmetallic/non-conducting/non-corroding.
- Threaded brass inserts
- Supplied as a fully assembled one piece unit.
- Clear Vue vacuum formed removable covers

Kwikon Standard Slab Boxes
with Molded Connectors – Volume 44 cu in.

Size inches	Part Number	Product Code
8 x 1/2	SMB-H-10	089465
8 x 3/4	SMB-H-15	089462
4 x 1/2, 4 x 3/4	SMB-H-10/15	089458
4 x 1/2, 2 x 3/4, 2 x 1	SMB-H-10/20	089466
4 x 3/4 , 4 x 1	SMB-H-15/20	089464

Kwikon Standard Slab Boxes with Knockouts
(without Molded Connectors) – Volume 44 cu in.

Size inches	Part Number	Product Code
8 x 1/2	SMB-10	089460
4 x 1/2, 2 x 3/4 , 2 x 1	SMB-10/20	089461

SHALLOW SLAB BOXES

- Threaded brass inserts
- Overall height of box (2-7/8”) allows for use in thinner slabs
- Clear Vue vacuum formed removable covers

Kwikon Shallow Slab Boxes
with Molded Connectors – Volume 36 cu in.

Size inches	Part Number	Product Code
8 x 1/2	SMBS-H-10	089480
8 x 3/4	SMBS-H-15	089482
4 x 1/2, 4 x 3/4	SMBS-H-10/15	089481
1/2, 2 x 3/4 , 2 x 1	SMBS-H-10/20	089483
4 x 3/4 , 4 x 1	SMBS-H-15/20	089484

Kwikon Shallow Slab Boxes with Knockouts
(without Molded Connectors) – Volume 36 cu in.

Size inches	Part Number	Product Code
8 x 1/2	SMBS-10	089490
4 x 1/2, 2 x 3/4 , 2 x 1	SMBS-10/20	089491

EXTENSION RING

- Easily installed
- Quickly adjusts to new height
- Adjusts height of SMB/SMBH series slab boxes by 1”

Kwikon Slab Box Extension Ring

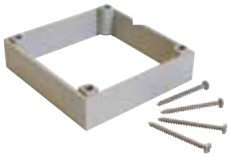

Size inches	Part Number	Product Code
	SMBR	089494

SQUARE SLAB BOXES

- Direct mounting of 4” devices and 4” square covers.
- Mounting feet are located on corners for quicker positioning and securing to form.
- Standard dimension 2-gang cover plates cover all exposed surfaces.
- Clear Vue vacuum formed removable covers

Kwikon Square Slab Boxes
'th Molded Connectors – Volume 44 cu in.

Size inches	Part Number	Product Code
8 x 1/2	SSBH-10	089467
8 x 3/4	SSBH-15	089468
‹ 1/2, 4 x 3/4	SSBH-10/15	089469
ı/2, 2 x 3/4 , 2 x 1	SSBH-10/20	089474
4 x 3/4 , 4 x 1	SSBH-15/20	089475

CONCRETE WALL BOXES

- Fully assembled and installation ready
- Perfectly suited for deep or shallow construction preferences
- Kwikon hubs do not protrude inside the box
- Clear Vue vacuum formed removable covers

Kwikon Concrete Wall Boxes
3-1/2” Deep Boxes – Volume 38 cu in.

Size inches	Part Number	Product Code
4 x 1/2, 4 x 3/4	SVDB-H-10/15	089496
4 x 3/4, 4 x 1	SVDB-H-15/20	089049
4 x 1/2, 2 x 3/4, 2 x 1	SVDB-H-10/20	089052
8 x 3/4	SVDB-H-15	089065

Kwikon Shallow Concrete Wall Boxes
2” Shallow Boxes – Volume 38 cu in.

Size inches	Part Number	Product Code
4 x 1/2	SVSB-H-10	089054
4 x 3/4	SVSB-H-15	089053

SLAB BOX ASSEMBLY FOR USE WITH PLASTER RINGS

- Slab box assemblies are supplied without the collar - ready to accept the desired raised cover/plaster ring.
- Plaster rings mount directly to the box opening using the screws supplied.
- Used with raised covers, boxes are perfect for use in shear wall or block construction for wall mounted fixtures and devices.
- Clear Vue vacuum formed removable covers

Kwikon Slab Boxes
with Molded Connectors – Volume 29 cu in.

Size inches	Part Number	Product Code
8 x 1/2	MBH-10	089022
8 x 3/4	MBH-15	089018
4 x 1/2, 4 x 3/4	MBH-10/15	089020
4 x 1/2, 2 x 3/4 , 2 x 1	MBH-10/20	089019
4 x 3/4 , 4 x 1	MBH-15/20	089021

Kwikon Slab Boxes with Knockouts
(without Molded Connectors) – Volume 29 cu in.

8 x 1/2	MB-10	089017
4 x 1/2, 2 x 3/4 , 2 x 1	MB-10/20	089016

CLEAR VUE™ COVERS

All boxes now feature our Clear Vue™ vacuum formed removable covers

- Covers are easily removed
- Allows markings to be seen
- Easy to remove
- Prevents ceiling stucco spray from entering the box

ACCESSORIES

Description	Part Number	Product Code
Cutting Tool		
Cutting Tool 1/2" – 1"	CLC20	089066
Cutting Tool 1/2" – 2"	CLC35	089068
Replacement Blade for CLC20	SSB	089067
Replacement Blade for CLC35	SB35	089069

Tapered Plugs		
1/2	KTP10	089003
3/4	KTP15	089004
1	KTP20	089005

One Kit, Four Heights, One Low Cost!

This simple yet innovative Round Floor Box Stand is equipped with several height brackets which accommodate the different rebar and post-tension cable heights and slab depths found from job-site to job-site. When installed together, the Floor Box and Stand can be used in 5-1/2" to 10" slab depths.

Sold as a Kit, Kraloy offers the Round Floor Box and Stand conveniently packaged together as one complete product offering.

FEATURE & BENEFITS

- Four Adjustable Heights
- Raises Entrance Hubs to Rebar
- Minimizes Footprint on Concrete Form
- Withstands Tough Job Site Conditions
- Easy to Install
- Cost Effective

FLOOR BOX STAND KIT

Is equipped with several height brackets which accommodate the different rebar and post-tension cable heights and slab depths found from job-site to job-site.

	Part Number	Product Code
Floor Box Stand Kit includes FB Box		
	FBS-KIT	178269

The SceptaCon Solution

The SceptaCon Joint

Featuring slide-in spline locking system

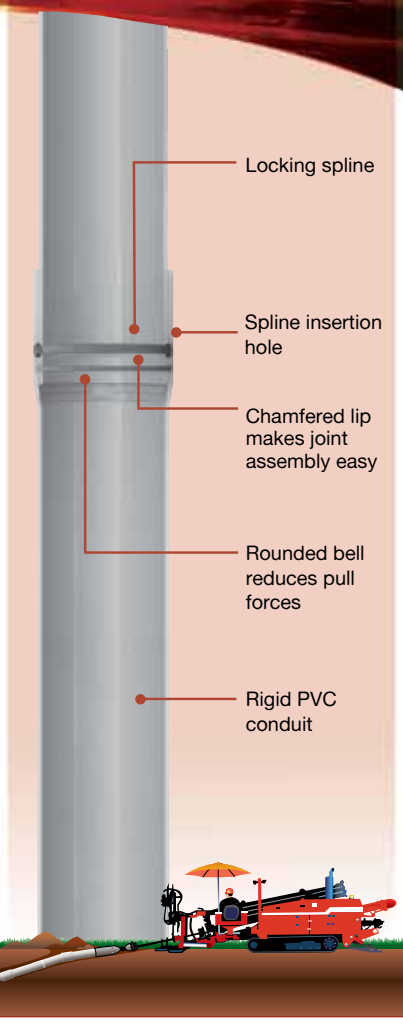

...an essential part of your SMART lighting solution

SceptaCon™ is one of the first PVC systems designed for the rigors of trenchless applications. Made of durable Schedule 40 PVC, SceptaCon links seamlessly to existing PVC conduit infrastructure and allows utilities to standardize on PVC throughout their entire electrical system.

Now available in a 2" diameter, SceptaCon is ideally suited for street lighting and traffic signal applications where installation requires a smaller diameter pipe than your typical electrical raceway. As the only approved, boreable PVC electrical raceway available in a 2" size, SceptaCon allows contractors to install RW cables instead of the more expensive TECK cables.

No Fusion or Cementing Required

With SceptaCon's slide-in locking system, a watertight joint can be made in seconds, without fusion or cementing

Pressure Rating & Flexibility

SceptaCon is pressure rated to 80 psi and approved for a 65 ft bend radius

Easier to Handle & No Reel to Return

Installed one length at a time, SceptaCon doesn't require the use of a reel…no reel deposit, no reel truck, and no need to return the reel after use

SceptaCon

Technical Information 66

Performance Specifications 68

Joint Assembly 69

SceptaCon™

SceptaCon™ is one of the first PVC systems designed for the rigors of trenchless applications. It links seamlessly to existing PVC conduit infrastructure and allows utilities to standardize on PVC throughout their entire electrical system.

Made from durable Schedule 40 PVC, SceptaCon is a proven mechanical, spline-locking system designed specifically for horizontal direction drilling. Approved for a 65 ft bend radius – the same as most drilling rods – SceptaCon can effectively bend around obstacles such as rocks and other utilities.

SceptaCon is available in sizes 2" – 6" in both 10 ft and 20 ft lengths making SceptaCon easy to transport and handle on the jobsite compared to large HDPE reels and coils.

APPLICATIONS

- Environmentally Sensitive Areas
- Historical Landmarks
- Road and Highway Crossings
- Urban Areas

STANDARDS

UL 651

ADVANTAGES

1 NO CEMENTING OR LUBRICATION REQUIRED

SceptaCon's slide-in locking system and pre-installed, pre-lubricated gaskets allow contractors to create a water-tight seal by hand in seconds – in all temperatures without having to worry about solvents or chemicals freezing or drying too quickly.

2 NO FUSION REQUIRED

Because SceptaCon joints can be quickly joined by hand in seconds, crews don't need large, expensive fusion equipment or special training to create water-tight joints.

In addition, SceptaCon can be assembled one pipe length at a time, then pulled underground, eliminating the need for long strings of pipe on the job. In this way, SceptaCon is ideal for short haul applications in cramped urban areas.

3 SUPERIOR PERFORMANCE

SceptaCon is made from durable schedule 40 PVC that's resistant to creasing, scoring or flattening when pulled past obstructions in the borehole, yet flexible enough to bend with underground twists and turns. SceptaCon remains round, unlike HDPE which can stretch and become oval. And with PVC's proven 70-year history in underground piping, it's no surprise telecommunication contractors are turning to SceptaCon PVC raceway for reliable performance – now and over the long term.

4 EASIER TO HANDLE

SceptaCon saves crews all the hassles of working with HDPE. As any crew knows, cumbersome HDPE reels are heavy and awkward to transport and work with, and the material is notoriously rigid in cold temperatures. On the other hand, SceptaCon is available in convenient 10' and 20' lengths that are lightweight, easy to handle and no problem to work with in all types of weather.

SHORT FORM SPECIFICATIONS

GENERAL

Installation of conduit in defined areas (such as environmentally sensitive areas, existing roadways and high traffic pedestrian areas) shall be accomplished using trenchless horizontal directional drilling methods.

PRODUCT

The trenchless raceway system shall be manufactured of schedule 40 PVC and to PVC conduit specifications providing for a seamless transition to rigid nonmetallic conduit, duct or other approved conduit systems. Each length of conduit shall be supplied with end caps, a locking spline, a factory installed pre-lubricated o-ring seal and a positive stop alignment ring. Each length shall incorporate dimensionally precise machined grooves (internal on the bell and external on the spigot) whereby the connection of the raceway lengths creates a cavity for the locking spline. The bell end of each length shall have a label affixed by the manufacturer that provides installation instructions while clearly identifying and protecting the spline insertion opening.

Acceptable manufacturers are: SceptaCon Trenchless Raceway by Kraloy.

APPROVALS

The Trenchless Raceway System shall be third party certified to UL651 and CSA C22.2 No.211.2.

PERFORMANCE SPECIFICATIONS

SceptaCon is made for fast installation, creating a water-tight seal in seconds with no special fusion equipment or training needed. SceptaCon is manufactured to UL651 and CSA C22.2 no. 211.2 standards and meets all testing requirements of Rigid PVC Conduit (PVC).

- SceptaCon's rated bend radius is sixty five (65) feet
- Rated Pulling Force

2" – 3,000 lbs 4" – 8,700 lbs
3" – 7,000 lbs 5" – 11,300 lbs 6" – 14,000 lbs

- SceptaCon's water tightness using the joint immersion test

– 80psi pressure without a bending force applied
– 80psi pressure when subjected to a 65 foot bend radius

PRODUCT SELECTION CHART

Nominal Diameter in	Product Code	O.D. in	I.D. in	Min. Wall in
10' Lengths				
4	106440	4.500	4.026	0.237
5	106450	5.563	5.047	0.258
6	106460	6.625	6.065	0.280
20' Lengths				
2	106421	2.375	2.067	0.154
3	106431	3.500	3.068	0.216
4	106441	4.500	4.026	0.237
5	106451	5.563	5.047	0.258
6	106461	6.625	6.065	0.280

The SceptaCon joint features internal stopping features that gradually stop the spigot during insertion to avoid bottoming out within the bell, which avoids the possibility of over insertion.

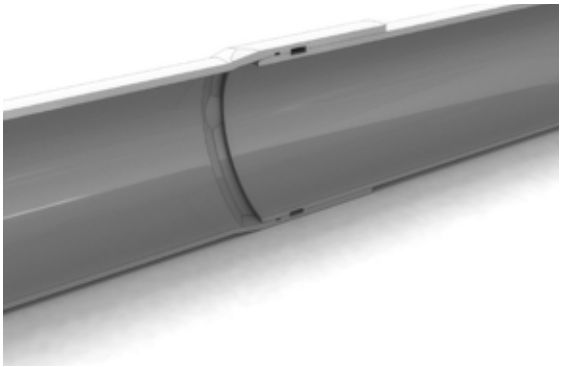

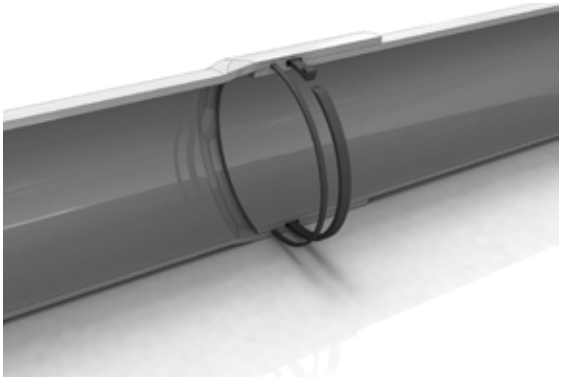

THE SCEPTACON JOINT

Featuring slide-in spline locking system.

FAST AND EASY JOINT ASSEMBLY

SceptaCon needs no special equipment or training joining quickly to create a water-tight seal in seconds.

Step 1

Remove the red protective plugs and locking spline. Slide the spigot and bell ends past the pre-lubricated gasket to the positive stop alignment ring.

Step 2

Using the insertion hole, completely push the locking spline into the pipe's inner groove to lock lengths together.

Step 3

You're done! Our spline locking system ensures they'll stay together during pull-through and over their life underground.

Sceptalight LED

Introducing the Sceptalight LED light fixture and adapter kit. Sceptalight LEDs offer significant energy savings and can last beyond 50,000 hours without a single need for maintenance. Certified and tested for use in indoor, outdoor, wet locations, wash down and corrosive environments, Sceptalight LEDs are certified to the latest LED light fixture standards and NEMA 4X approved.

RETROFIT OPTION
Sceptalight LEDs can easily retrofit onto existing installations for increased energy savings.

CORROSION RESISTANT
Heat sink is coated with a durable e-coat layer that prevents corrosion.

NEMA 4X AND IP66 RATED
Approved for wet locations, wash down and corrosive environments.

HEAT DISSIPATION
Specially designed heat sink ensures long life and optimum performance for over 50,000 hours.

ENERGY EFFICIENT
1,575 lumens of light output is produced with only 15 Watts of electricity.

DIMMABLE
Lights are dimmable down to 5% for maximum control of the lighting environment.

POLYCARBONATE GLOBE
Impact and weather resistant for tough environments.

Sceptalight

Technical Information 72

Sceptalight LED 74

Sceptalight Compact Fluorescent 76

Sceptalight Incandescent 78

Mounting Options 80

Wet, Hazardous & Marine Location Use 81

Accessories 83

Sceptalight™

Whether you're looking for economical outdoor lighting solutions or corrosion-resistant fixtures for punishing industrial environments, Sceptalight fixtures from Kraloy prove themselves to be all-round performers in a variety of indoor and outdoor applications.

Sceptalight fixtures are made from a glass-reinforced thermoplastic polyester resin, which offers outstanding corrosion and chemical resistance. And its interior and exterior silicone gaskets create a watertight seal, the reason it performs equally well indoors and outside. This thermoplastic design marries an unrivaled balance of strength, stiffness and toughness with all the benefits users appreciate of Scepter Rigid PVC Conduit and Kraloy Fittings – long life, easy servicing and high impact-resistance.

APPLICATIONS

- Chemical Plant
- Food Processing
- Highway Tunnel
- Mine Tunnels
- Walk-in Freezers
- Industrial/Commercial
- Marine
- Agricultural
- Waste Water
- Greenhouses

STANDARDS

ADVANTAGES

1 **AVAILABLE** in LED, compact fluorescent & incandescent to suit a variety of applications

2 **STABLE CONSTRUCTION**
Reinforced support feet offer secure mounting.

3 **ADAPTABLE**
Threaded conduit hubs permit connection to nonmetallic and metallic raceways.

4 **WATERTIGHT SEAL**
Temperature and weather-resistant silicone gaskets protect fixture from moisture penetration.

5 **LONG LIFE**
Sceptalight nonmetallic fixtures provide long life and easy servicing—unlike metal fixtures and guards that can corrode and seize together.

6 **INDOOR/OUTDOOR USE**
UV-resistant material makes Sceptalight fixtures suitable for both indoor and outdoor use.

7 **CORROSION RESISTANT**
Thermoplastic construction resists attack from acids, alcohols, alkalis, organic solvents, detergents/ cleaners, greases and oils as well as many other types of chemicals.

Withstands exposure to direct sunlight, heat, salt water and extreme weather.

8 **DURABLE, IMPACT RESISTANT**
High-impact nonmetallic guard resists physical impact, chemical attack and heat-induced deformation.

SHORT FORM SPECIFICATIONS

Light fixtures shall be nonmetallic and constructed of 30% glass filled polyester material exhibiting a maximum linear expansion of 1.4x105 in./in./°F. Fixtures shall be assembled with high temperature silicone gaskets, brass inserts and screws.

Incandescent light fixtures shall be rated for use with a Maximum 150 Watt incandescent lamp. Compact fluorescent light fixtures shall be of the wattage specified and be supplied complete with lamp and ballast (high power factor, low harmonic electronic for 18 & 26 Watt fixtures.

LED light fixtures shall be third-party certified to CSA 22.2 250.0 and UL 1598C. LED light fixtures will also be NEMA 4X and IP66 rated for wash-down and corrosive environments. LED light fixtures for hazardous use locations shall be third-party certified to UL 844 for Class I Div 2 and Class II Div 2 hazardous location use.

LED Retrofit Light Engines shall be certified to CSA 22.2 no 250.1 and UL 1598C.

Approved products: Sceptalight LVPE and LVPL series light fixtures manufactured by Kraloy.

WET LOCATIONS

C22.2 No. 250
CSA Listed to UL 1598
Minimum 60°C supply conductors

CSA certified for wet locations, Sceptalight fixtures are built to withstand any environment where liquids drip, splash or flow against electrical equipment. And our polycarbonate globes are an excellent alternative to glass in punishing environments where high impact resistance is important. Sceptalight fixtures can operate in extreme temperatures and are resistant to damaging ultraviolet rays. For years, our fixtures have been proven performers on docks, wharfs, decks, walkways, shipyards and a variety of other applications where exposed to the elements.

LIGHT OPTIONS	
LED	✔
Incandescent	✔
Compact Fluorescent	✔

HAZARDOUS LOCATIONS

CSA Listed to UL 844
CLASS I, DIV 2 Groups A, B, C & D
CLASS II, DIV 2 Groups F & G
Minimum 90°C supply conductors

Sceptalight offers fixtures that are CSA certified for hazardous locations, making them the ideal choice for specific harsh industrial environments involving flammable or explosive gases, vapors or dusts. In addition to their sturdy construction, all our fixtures rated for hazardous locations include a heat-treated globe designed to endure drastic temperature changes such as direct spray of cool water on a hot fixture. Sceptalight fixtures are equipped with brass screws and inserts to ensure performance in punishing industrial conditions.

LIGHT OPTIONS	
LED	✔

SCEPTALIGHT LED

Introducing three Sceptalight LED products: the LED Retrofit Light Engine, the Heavy-Duty LED Light Fixture and the Utility LED Light Fixture. Sceptalight LEDs offer significant energy savings, up to 85% compared to incandescent, and up to 34% compared to fluorescents. Moreover, Sceptalight LEDs can last beyond 50,000 hours without a single need for maintenance.

Constructed of very strong and durable materials, the polycarbonate globe is impact resistant and is resistant to UV light degradation. The specially designed aluminum heat sink dissipates the heat generated by the LEDs to the exterior environment ensuring long-life and optimal performance in both hot and cold environments. Sceptalight LEDs have been tested and certified for use in indoor, outdoor, wet location, wash down and corrosive and hazardous* environments. They are certified to the latest LED light fixture standards and NEMA 4X approved.

*LVPF-LED-HAZ only

PHOTOMETRIC DATA

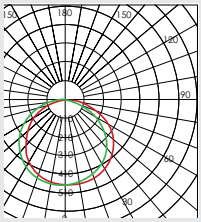

15W 120V
Frosted LED

STANDARDS

PRODUCT	APPROVED USE	STANDARDS
LLED-15 (light engine only)	WET LOCATION	CSA C22.2 250, UL 1598C
LVPE-LED	WET LOCATION	CSA C22.2 250, UL 1598C
LVPF-LED-HAZ	HAZARDOUS LOCATION Class I, Div 2 Groups A, B, C & D and Class II, Div 2 Groups F & G	CSA C22.2 250, UL 1598C, UL 844

RETROFIT OPTION
Sceptalight LEDs can easily retrofit onto existing installations for increased energy savings.

CORROSION RESISTANT
Heat sink is coated with a durable e-coat layer that prevents corrosion.

NEMA 4X AND IP66 RATED
Approved for wet locations, wash down and corrosive environments.

HEAT DISSIPATION
Specially designed heat sink ensures long life and optimum performance for over 50,000 hours.

ENERGY EFFICIENT
1,575 lumens of light output is produced with only 15 Watts of electricity.

DIMMABLE
Lights are dimmable down to 5% for maximum control of the lighting environment.

POLYCARBONATE GLOBE
Impact and weather resistant for tough environments.

TECHNICAL SPECIFICATIONS

LUMEN OUTPUT	1575 LM
INPUT VOLTAGE	120 VAC
FREQUENCY	60 HZ
NOMINAL POWER	15 W
COLOR TEMPERATURE	5000 K
CRI	> 80
POWER FACTOR	0.98
TOTAL HARMONIC DISTORTION	10.5%
OPERATING TEMPERATURE	-40□C TO 40□C
DIMMABILITY RANGE	DOWN TO 5%
RATED LIFE	> 50,000 HOURS
WARRANTY*	5 YEARS

*LIMITED WARRANTY & LIMITATION OF LIABILITY: Consult Kraloy Sceptalight™ LED Retrofit Light Engine Specific Terms and Conditions of Sale and Limited Warranty and Limitation of Liability for further details, available at www.kraloyfittings.com

SCEPTALIGHT COMPACT FLUORESCENT

Sceptalight Compact Fluorescent fixtures combine the outstanding corrosion and chemical resistance of their thermoplastic design with the energy-saving advantages of compact fluorescents. Working four to five times more efficiently per watt than incandescents, Sceptalight compact fluorescents provide 10-20 times the lamp life. Without sacrificing light levels, they use 75% less energy than incandescents for a lower total energy and maintenance cost. They are available in twin tube and quad tube configurations and include ballast.

Quad Tubes

- Available in 18 & 26 Watt
- Electronic Ballast provides “Instant Start” at temps as low as -25°C
- Offers 10,000 hours of lamp life

STABLE CONSTRUCTION
Reinforced support feet offer secure mounting.

ADAPTABLE
Threaded conduit hubs permit connection to nometallic and metallic raceways.

WATERTIGHT SEAL
Temperature and weather-resistant gaskets protect fixture from moisture penetration.

LONG LIFE
Sceptalight nonmetallic fixtures provide long life and easy servicing—unlike metal fixtures and guards that can corrode and seize together.

INDOOR/OUTDOOR USE
UV-resistant material makes Sceptalight fixtures suitable for both indoor and outdoor use.

CORROSION RESISTANT
Thermoplastic construction resists attack from acids, alcohols, alkalis, organic solvents, detergents/cleaners, greases and oils as well as many other types of chemicals. Withstands exposure to direct sunlight, heat, and extreme weather.

DURABLE, IMPACT RESISTANCE
High-impact nonmetallic guard resists physical impact, chemical attack and heat-induced deformation.

SCEPTALIGHT INCANDESCENT

Sceptalight incandescent fixtures make the most practical choice to meet the daily needs of commercial, industrial, marine and agricultural applications. Our incandescents will take up to a 150 watt incandescent bulb and are ideal for short burn times as well as flashing and dimming applications.

For light to medium duty applications that do not require the same level of ruggedness, Sceptalight has a low-cost ceiling-mounted Utility Light Fixture available in standard, clear polycarbonate and coloured heat-resistant globes.

INSTALLATION FLEXIBILITY

Fixtures can be mounted in ceiling, or wall to accommodate installation requirements.

INDOOR/OUTDOOR USE

Temperature and weather-resistant gaskets protect fixture from moisture penetration.

COST EFFECTIVE SOLUTION

Inexpensive to install, the fixture takes up to a 150 watt incandescent bulb.

ADAPTABLE LIGHTING ENVIRONMENTS

Ideal for short burn times, flashing & dimming applications.

COLORED GLOBES

Available in a range of coloured heat-resistant globes to transform the light into an indicator or warning light.

CORROSION RESISTANT

Thermoplastic construction withstands exposure to direct sunlight, heat & extreme weather.

WET LOCATION USE

Description	Part Number	Product Code	Hub Sizes
Ceiling Mount with Frosted Polycarbonate Globe			
15W LED Retrofit Light Engine	LLED-15	277120	-
15W LED LVPF Heavy Duty Light Fixture	LVPF-LED-HAZ	277121	4 x 3/4"
15W LED LVPE Utility Light Fixture	LVPE-LED	277122	2 x 1/2" - 2 x 3/4"
Ceiling Mount with Standard Clear Glass Globe			
26W Compact Fluorescent	LVPL26C	077170	4 x 3/4"
18W Compact Fluorescent	LVPL18C	077210	4 x 3/4"
Ceiling Mount with Clear Polycarbonate Globe (no guard)			
26W Compact Fluorescent	LVPL26PCC	077176	4 x 3/4"
18W Compact Fluorescent	LVPL18PCC	077211	4 x 3/4"
Wall Mount Bracket (for WET Locations)			
Wall Mount bracket	LWB150	077233	-

For wall mount fixtures select and order the appropriate style (wattage and globe) ceiling mount fixture from above and add LWB150.Sceptalight compact fluorescent light fixtures are supplied complete with lamp and ballast.

Ceiling Utility Light Fixture 150 Watt Incandescent			
w/ Standard glass globe	LVPE150-10/15	077493	2 x 1/2" - 2 x 3/4"
w/ Polycarbonate globe	LVPE150-PCC	077181	2 x 1/2" - 2 x 3/4"
w/ Standard glass globe & guard Maximum 60W incandescent lamp with polycarbonate globe	LVPE150-10/15G	077402	2 x 1/2" - 2 x 3/4"
w/ Heat-resistant glass globe RED	LVPE150HRR	077599	2 x 1/2" - 2 x 3/4"
w/ Heat-resistant glass globe BLUE	LVPE150HRB	077579	2 x 1/2" - 2 x 3/4"
Clamp-on guard for LVPE	LVPUG150	077558	-

HAZARDOUS LOCATION USE

Description	Part Number	Product Code	Hub Sizes
Ceiling Mount with Frosted Polycarbonate Globe			
15W LED LVPF Heavy Duty Light Fixture	LVPF-LED-HAZ	277121	4 x 3/4"

All hazardous location fixtures are rated CLASS I, DIV 2 Groups A, B, C & D and CLASS II DIV 2 Groups F & G.

ACCESSORIES & COMPONENTS

Description	Part Number	Product Code
Standard Glass Globes		
Clear	LGC150	077247
Polycarbonate Globes (for use with compact fluorescent or maximum 60W incandescent lamp)		
Clear	LPCC18	077911
Red	LPCR18	077912
Heat-resistant Globes		
Clear	LG150T	077909
Red	LCGR150T	077239
Blue	LCGB150T	077910
Threaded Junction Boxes		
	LFB150C	077250
	LFB150T *	077251
Fixture Components (LVPF, LVPL, LPMF, LPPL)		
Ceiling Mount Box	LVPB 150	077243
Pendant Mount Cap	LPC 150	077246
90 Wall Bracket	LWB 150	077233
Screw-on Guard	LVPG 150	077978
Replacement Lamp Holders		
18 Watt Lamp Holder (4 Pin)	LLH 18	072818
Gaskets		
Box Gasket	LBGASK 150	072820
Ballasts		
26 Watt Electronic Ballast (HPF)	LEB 26	077080

*LFB150T complete with 1/2 threaded" hole in center of cover

MOUNTING OPTIONS

Sceptalight LED can be retrofit with Ceiling Mounts only.

CEILING MOUN

Box with threaded hubs and integral mounting feet

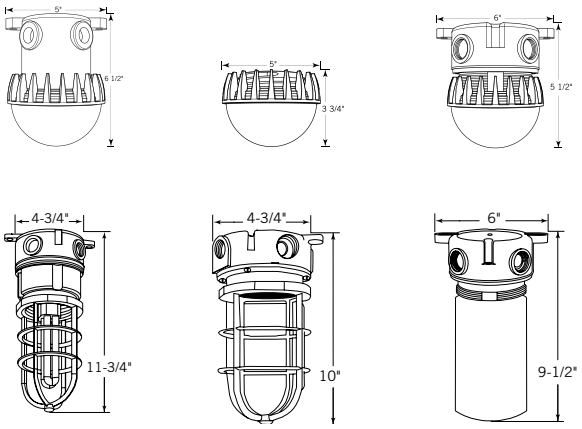

CEILING MOUNT UTILITY FIXTURES

Box with threaded hubs and integral mounting feet

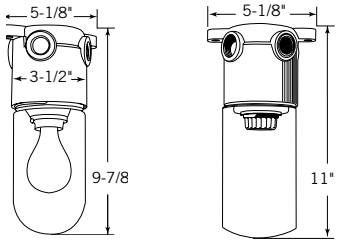

GLOBE OPTIONS

(For incandescent and fluorescent options only)

STANDARD CLEAR GLASS GLOBES

Ideal for general purpose area lighting for either indoor or outdoor use.

CLEAR POLYCARBONATE GLOBES

Impact resistant globes for added protection in case of accidental contact

COLORED HEAT-RESISTANT GLASS GLOBES

Available in red or blue – to transform the light to an indicator or warning light.

Clear
Polycarbonate

Standard
or Heat-Treated
Clear Glass

Heat-Treated
Blue Glass

Heat-Treated
Red Glass

Kwikflex

Technical Information 82

NMLT Conduit 83

NMLT Fittings 83

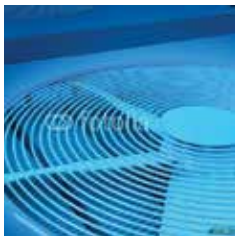

KWIKFLEX®

Available in sizes from 3/8” to 2”, Kwikflex reels offer the end user the best possible continuous length in the market place. Its patented design offers a low profile coupling that when two conduits are connected it is hardly noticeable and allows the user to run the conduit at any length desirable. There is no longer any need for additional parts when making a long conduit run.

Kwikflex NMLT is also available in extra-flexible formulations in sizes 3/8” to 2”

Kwikflex fittings are available in a full range of matching sizes in straight, 90 degree and in a multi-angle configuration. The Multi-Angle Conduit Connector features a unique swivel design which allows for:

- Multiple angle installations
- 45 degree installations
- The ultimate in flexibility for your job

ADVANTAGES

1 QUICK INSTALLATION

2 LOWER INSTALLED COST

3 SMOOTH INTERIOR SURFACE

4 GRADUAL SWEEP

5 NO SHARP EDGES

6 QUICKER AND EASIER WIRE PULLING AND PUSHING

7 WON’T RUST OR CORRODE

8 ALL FITTINGS ARE UL LISTED AND CSA CERTIFIED

9 POSITIVE GRIP

10 LIQUIDTIGHT AND OILTIGHT

11 SUITABLE FOR WET AND DAMP LOCATIONS

12 PROVIDES A LIQUIDTIGHT SEAL AT KNOCKOUT HOLE, COMES WITH LOCKNUT AND SEALING O-RING

APPLICATIONS

- HVAC Equipment
- Machine Tools
- Marine Equipment
- Pumps
- Motors & Controls
- Outdoor Lighting
- Printing Equipment
- Refrigeration Equipment
- Transformer Connections

STANDARDS

NMLT Flexible Conduit

UL 1660 CSA C22.2 No. 227.2

NMLT Extra Flexible Tubing

NMLT Fittings

NMLT CONDUIT

NMLT Flexible Conduit (Grey) Type B

Size inches	Product Code	Length feet
3/8	165005	100
1/2	165007	100
3/4	165009	100
1	165011	100
1-1/4	165014	100
1-1/2	165017	50
1-1/2	165021	100
2	165020	50

NMLT Flexible Conduit Reels (Grey) Type B

Size inches	Product Code	Length feet
1/2	165082	1000
3/4	165085	700
1	165090	500

NMLT Extra Flexible Tubing (Black)

Size inches	Part Number	Product Code
3/8	165055	100
1/2	165057	100
3/4	165059	100
1	165061	100
1-1/4	165064	100
1-1/2	165067	100
2	165070	100

Other packages sizes available on request

NMLT FITTINGS

NMLT 90º Elbows (Grey)

Size inches	Product Code	Length feet
3/8	LTB03/90	065306
1/2	LTB10/90	065307
3/4	LTB15/90	065310
1	LTB20/90	065312
1-1/4	LTB25/90	065314
1-1/2	LTB30/90	065317
2	LTB35/90	065320

NMLT Straight Fittings (Grey)

Size inches	Product Code	Length feet
3/8	LTS03	065326
1/2	LTS10	065327
3/4	LTS15	065330
1	LTS20	065332
1-1/4	LTS25	065334
1-1/2	LTS30	065337
2	LTS35	065340

NMLT Screw-on 90º Elbows (Grey)

Size inches	Part Number	Product Code
1/2	LTD10/90	065350
3/4	LTD15/90	065352

NMLT Screw-on Straight Fittings (Grey)

Size inches	Part Number	Product Code
1/2	LTD10	065360
3/4	LTD15	065362

NMLT Screw-on Multi Angle Fittings (Grey)

Size inches	Part Number	Product Code
1/2	LTMA10	065015
3/4	LTMA15	065016

INEXO®

THE ICF BOX

THE INNOVATIVE ELECTRICAL BOX FOR INSULATED CONCRETE FORM CONSTRUCTION

For complete product information, visit www.kraloyfittings.com

KRALOY®

INEXO

Technical Information 86

Fast & Easy Installation 86

Inexo Residential Box 87

Inexo Commercial Box 87

Boxes and Low Voltage Divider 88

INEXO™

Until now there have been few choices when attempting to provide a truly professional electrical box solution for Insulated Concrete Form homes. Traditional electrical boxes are tedious to install and often require a fair amount of ingenuity and additional labour to provide a less than ideal finished product. Other boxes offered to ICF builders require installation before the concrete pour, throwing off your project time-line.

INEXO's patented1 design provides a truly professional solution that works with your production schedule and provides the quality installation and finished look that builders require and owners appreciate. INEXO boxes link seamlessly with existing ICF materials, tools and methods. A complete offering designed for ICF walls allow builders to standardize on the use of electrical boxes throughout the building.

1 Patent No. 6,932,628 & Patent Pending

APPLICATIONS

- Insulated Concrete Form Buildings
- Schools
- Churches
- Hotels

STANDARDS

C US

ADVANTAGES

1 INSTALLATION
Installation after concrete pour allows you to follow traditional production schedules

2 POSITIONING
Boxes can be installed anywhere on the ICF wall allowing for more variety in box positioning as installers are no longer required to affix to the ICF ties or drill and secure to the concrete wall.

3 AVAILABILITY
Residential boxes are available in single, double and triple

4 CERTIFICATION
Boxes are fully CSA certified to UL standards for use in ICF and can resist pull forces exceeding 100 lbs – (twice the standard requirement).

FAST AND EASY INSTALLATION

Installing INEXO boxes requires no special training making the transition to a new solution seamless.

STEP 1:
Select the position for your box. Using a hot-knife or cutting tool, cut the opening in the EPS foam.

STEP 2:
Insert the INEXO box into your opening and push the 'teeth' into place until you hear the 'click' – so you know your box is secure. If you are positioned next to a tie, you can utilize two of the 'teeth' on the non-tie side and use the flange holes on the opposite side to screw into the plastic tie.

STEP 3:
Pull through your NMD cable and continue.

Single gang box provides 19 cubic inch capacity

Greater installation versatility with 3 screw hole choices and flanges on both sides.

INEXO provides a 1/2” drywall setback resulting in a professional finish.

With an insertion depth of 2-1/4” and a smooth back, the INEXO box is designed specifically for ICF.

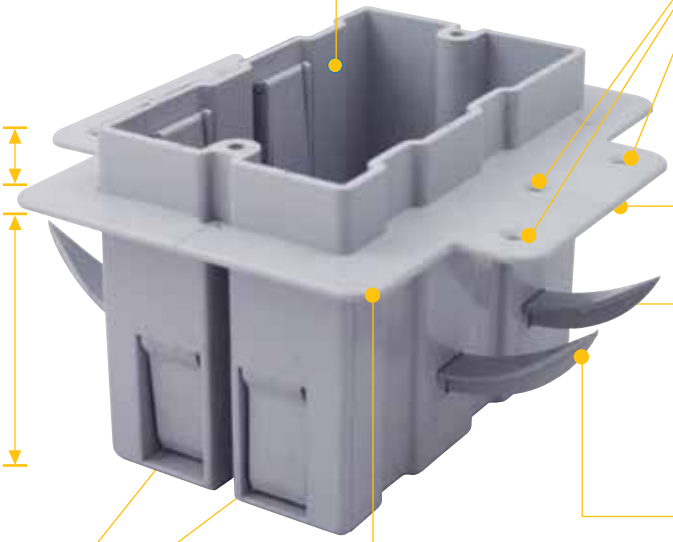

Laser level guides for the most precise box placement

‘TEETH’ can be easily removed and replaced and provide an audible ‘click’ when fully engaged and secured to the EPS foam.

‘TEETH’ lock in place for a rigid hold that won’t loosen.

Full flange prevents box from twisting and sinking into foam if over-tightened. This innovation allows installers to provide a professional straight finish with no lop-sided boxes.

RESIDENTIAL BOX DESIGNED FOR NMD CABLE (14/2 – 10/3).

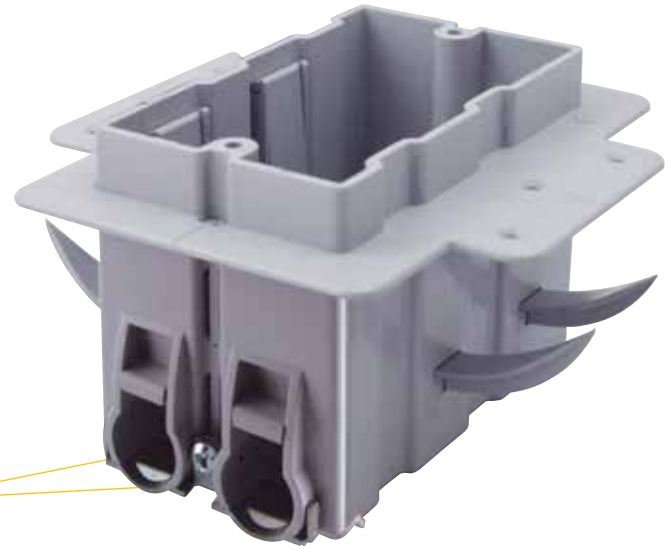

COMMERCIAL BOX DESIGNED FOR ARMORED CABLE (AC) OR NMD CABLE.

INEXO BOXES

	Description	Part Number	Product Code
Residential (NMD Cable 14/2 – 10/3)			
	Single Gang	ICF-1-RL	220000
	Double Gang	ICF-2-RL	220001
	Triple Gang	ICF-3-RL	220002
Commercial (AC or NMD Cable)			
	Single Gang	ICF-1-CLU	220009
	Double Gang	ICF-2-CLU	220010
	Triple Gang	ICF-3-CLU	220011

	Description	Part Number	Product Code
Low Voltage Divider			
	Divider	LVD-RL	220100
	For residential box only		

The INEXO ICF box divider provides contractors with a quick and convenient way to separate different voltage sources in the same box.

RESIDENTIAL BOX
WITH LOW VOLTAGE DIVIDER

notes

notes

Bookmark Our Website

www.kraloyfittings.com

PRODUCT INFO, REP LOCATOR & MORE ...

KRALOY ELECTRICAL CATALOGUE & ELECTRICAL POCKET PRO INCLUDE MORE INFORMATION ON:

- PVC Electrical Fittings
- Light Fixtures
- ENT Tubing & Fittings
- NMLT Conduit & Fittings
- Trenchless Raceways
- and much more ...

available at www.kraloyfittings.com

CUSTOMER SERVICE CENTER

1055 Wilton Grove Road
London, Ontario N6N 1C9

Tel: (519) 681-2140
Toll Free: (800) 265-1815
Fax: (519) 681-2156

www.kraloyfittings.com

Kraloy has been an industry leader for over 40 years supplying the electrical trade with a comprehensive offering of nonmetallic PVC fittings. Kraloy offers adapters, couplings, elbows, access fittings, boxes, cover plates, expansion fittings and spacers – virtually any fitting required to complete the PVC conduit system.

Check out the full Kraloy product offering on our web site www.kraloyfittings.com or contact us directly for information.

Only when you specify Kraloy by name are you guaranteed The Fitting Choice.

Kraloy is proud to offer these quality brands.

KRALOY® PVC CONDUIT FITTINGS
INEXO™
Sceptalight™ Nonmetallic Light Fixtures
KRALOY® JBox™ The Next Generation Junction Box
SceptaCon™ Trenchless Raceways Systems
EPR
KWIKON® ENT & FITTINGS
KWIKFLEX® LIQUIDTIGHT FLEXIBLE NONMETALLIC CONDUIT & FITTINGS

Products are manufactured by IPEX Electrical Inc. and distributed in the United States by Kraloy, a division of Multi Fittings Corp.

Kraloy® is a trademark of Multi Fittings Corp.

Inexo®, Kwikflex®, Kwikon®, SceptaCon™, Sceptalight™ and JBox™ are trademarks of IPEX Branding Inc.

DISTRIBUTED BY:

www.kraloyfittings.com

This literature is published in good faith and is believed to be reliable. However, Kraloy does not represent and/or warrant in any manner the information and suggestions contained in this brochure. Data presented is the result of laboratory tests and field experience. Kraloy maintains a policy of ongoing product improvement. This may result in modifications of features and/or specifications without notice.

KRALOY®

CTELNAKR220602K
© 2022 Kraloy KR0043